CATALOG CONTENTS

PROFILES AND PROPERTIES 2

TECHNICAL GUIDELINES 4

PROPERTIES AND VERTICAL LOADS 26

PLB™-36 DECK–PNEUTEK FASTENERS . . . 30
Sidelaps Connected with PunchLok® Tool

PLB™-36 DECK–HILTI FASTENERS 36
Sidelaps Connected with PunchLok® Tool

PLB™-36 DECK–WELDS. 42
Sidelaps Connected with PunchLok® Tool

HSB®-36 DECK–WELDS 48
Sidelaps Connected with BP or TSW

SHEARTRANZ® SYSTEMS 54
Sidelaps Connected with PunchLok® Tool, BP, or TSW

PLN™-24/N-24 DECK. 66
Sidelaps Connected with PunchLok® Tool, BP, or TSW

DEEP VERCOR™ DECK 68

CELLULAR ROOF DECK. 79

Type	Profile (dimensions in inches)	Gage	Weight Galv psf N/m²	Weight Painted psf N/m²	Section Properties per ft (m) of width I in.⁴ mm⁴	+ S in.³ mm³	– S in.³ mm³
PLB™-36/HSB®-36	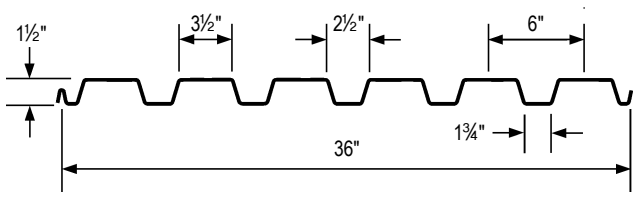	22	1.9 91.0	1.8 86.2	0.175 238,978	0.187 10,054	0.198 10,645
		20	2.3 110.1	2.2 105.3	0.216 294,967	0.235 12,634	0.248 13,333
		18	2.9 138.9	2.8 134.1	0.302 412,408	0.322 17,312	0.335 18,011
		16	3.5 167.6	3.4 162.8	0.377 514,827	0.411 22,097	0.417 22,419
PLN™-24/N-24	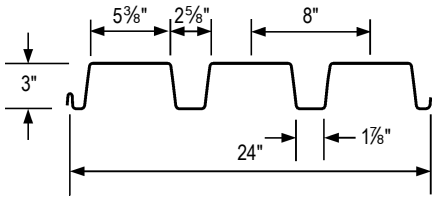	22	2.2 105.3	2.1 100.5	0.655 894,460	0.394 21,183	0.454 24,408
		20	2.6 124.5	2.5 119.7	0.837 1,142,997	0.508 27,312	0.562 30,215
		18	3.5 167.6	3.4 162.8	1.223 1,670,114	0.731 39,301	0.776 41,720
		16	4.2 201.1	4.1 196.3	1.647 2,249,123	0.950 51,075	1.005 54,032
DEEP VERCOR™	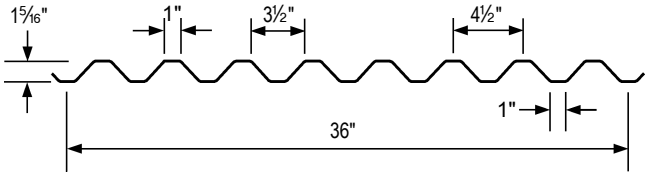	26	1.1 52.7		0.073 99,688	0.099 5,323	0.103 5,538
		24	1.4 67.0		0.098 133,828	0.138 7,419	0.140 7,527
		22	1.7 81.4		0.123 167,967	0.175 9,409	0.174 9,355
		20	2.1 100.5		0.143 195,279	0.207 11,129	0.206 11,075

1. Section properties have been computed in accordance with the "Specification for the Design of Cold-Formed Steel Structural Members" published by AISI. The section properties are based on the following steel strengths:

Profile	Minimum Yield Strength (F_y)	Bending Strength (F_b)
PLB™-36/HSB®-36	38 ksi (*262,000 kPa*)	22.8 ksi (*157,200 kPa*)
PLN™-24/N-24	33 ksi (*227,527 kPa*)	20.0 ksi (*137, 895 kPa*)
Deep VERCOR™	80 ksi (*551,581 kPa*)	36.0 ksi (*248,211 kPa*)

2. Section properties and values shown apply to all available widths.
3. Material thickness is subject to AISI tolerances. See ICBO ES Report ER-2078P for decimal thickness of material.
4. Weights shown are approximations for design purposes.
5. All dimensions are nominal and are subject to manufacturing tolerances.

Metric Conversions

in.	mm	in.	mm	in.	mm	in.	mm	in.	mm
1	25	1¾	44	2⅝	67	4½	114	8	203
1⁵⁄₁₆	33	1⅞	48	3	76	5⅜	137	24	610
1½	38	2½	64	3½	89	6	152	36	914

TECHNICAL GUIDELINES CONTENTS

Profile Designations 4

Roof Deck Vertical Loads 4
- Uniform Load Tables 4
- Bearing 4
- Design Formulas 5
- Concentrated Loads 5
- Suspended Loads 5
- Cantilevered Deck 5
- Factory Mutual 6
- Wind Uplift 6

Roof Deck Diaphragms 6
- Diaphragm Load Tables 6
- Composite Deck Diaphragms 7
- Axial Loads 7

Attachment Of Roof Deck 7
- Support Fastening 7
  - Welds 7
  - Pneutek Pins 7
  - Hilti Pins 8
  - ShearTranz® Systems 9
- Sidelap Connections 10
  - PunchLok® System 10
  - Top Seam Welds 11
  - Button Punches 11
  - Screws 11
- Parallel Collectors 11
  - Arc Spot Welds 11
  - Fillet Welds 11
  - Pneutek Pins 12
  - Hilti Pins 12

Verco Roof Deck Finishes 12
- Primer Painted 12
- Galvanized 12
- Galvanized with Primer 12
- Exposed Product Appearance 13
- Packaging 13

Roof Deck Product Selection 13
- Spans 13
- Roofing 13
- Fire-Rated Verco Roof Deck 13
- Venting Verco Roof Deck 13
- Acoustical Roof Deck 14

Roof Deck Design Example 14
- Design Goals 14
- Span Options 15
- Diaphragm Attachment Options 15
- Finish Options 17
- Specification Considerations 17
- Architectural Considerations 17
- Fire Ratings 17

Roof Deck Fire Resistance Ratings 18

Roof Deck Accessories 19

Specification 05311 Steel Roof Deck 20

Metric (SI) Conversions 24

Using the Tables 25

VERCO ROOF DECK TECHNICAL GUIDELINES

Verco Manufacturing Co. is noted for its innovative development of steel roof decks including the use of shear restraining elements (the ShearTranz® systems) and — ***now*** mechanical sidelap connections (the PunchLok® system). In this catalog Verco introduces a complete range of systems utilizing the revolutionary PunchLok system for sidelap connections: 1½"deep PLB™-36 deck with welds to the supports, PLB-36 deck with pins to the supports, PLB-36 deck with ShearTranz II-42, and 3" deep PLN™-24 deck with welds to the supports. We are also introducing improved values for HSB®-36 deck with top seam welded sidelaps. With the PunchLok system, Verco continues our industry leading history of improvement and innovation to serve the construction community.

Profile Designations

Deck for PunchLok® Systems:

- PLB-36
- PLB-36 with ShearTranz II-42 system
- PLN-24

Deck for Button Punch and Top Seam Weld Sidelaps:

- HSB-36
- HSB-36 with ShearTranz or ShearTranz II systems
- N-24
- N-24 with ShearTranz system

ROOF DECK VERTICAL LOADS

Uniform Load Tables

The tables on pages 27 and 29 list allowable uniform loads. These are the total uniform loads which can be applied to the roof deck. Values are based on the allowable bending stress and limiting deflection to L/240. The symbol ✦✦✦ indicates that the allowable uniform load based on deflection exceeds the allowable load based on stress. Stress for the PLB-36 and HSB-36 profiles is limited to 22,800 psi (*157,200 kPa*) based on F_y = 38,000 psi (*262,000 kPa*) minimum. Stress for the PLN-24 and N-24 profiles is limited to 20,000 psi (*137,895 kPa*) based on F_y = 33,000 psi (*227,527 kPa*) minimum. The formulas used to determine the allowable uniform loads due to stress and deflection are on page 5.

Note: Vertical loads, such as allowable uniform loads and deck weights, are converted to N/m^2 for ease of use.

Bearing

Verco recommends 2 inches (*51 mm*) minimum bearing on perpendicular supports for Verco roof deck. The required bearing should be verified based on specific span conditions. Adequate bearing is required to prevent web crippling of the deck and to allow proper attachment of the deck. The allowable reactions for uniform loads are shown in the section properties tables.

Web crippling due to concentrated loads, such as curbs, located directly over supports should also be evaluated. Contact the Verco Engineering department for additional information.

Adequate bearing at parallel supports should be provided to make the specified connections.

Design Formulas

+M= Positive Bending Moment in ft-lb (*Nm*)
–M= Negative Bending Moment in ft-lb (*Nm*)
Δ= Deflection in inches (*mm*)
E= 29,500,000 psi (2.03×10^8 *kPa*)
C_d= 1728 (*SI = 1*), Deflection Constant
w =Allowable uniform live load in psf (N/m^2)
L=Span length in feet (*mm*). Span lengths shown in tables are center-to-center spans.
R_e=End reaction in lb/ft (*N/m*)
R_i=Interior reaction in lb/ft (*N/m*)

Span	Bending Moment	Deflection	Bearing
Simple	$+M = 0.125 \cdot w \cdot L^2$	$\Delta = \frac{0.013 \cdot w \cdot L^4 \cdot Cd}{E \cdot I}$	$R_e = 0.5 \cdot w \cdot L$
Double	$-M = 0.125 \cdot w \cdot L^2$	$\Delta = \frac{0.0054 \cdot w \cdot L^4 \cdot Cd}{E \cdot I}$	$R_e = 0.375 \cdot w \cdot L$ $R_i = 1.25 \cdot w \cdot L$
Triple	$-M = 0.1 \cdot w \cdot L^2$	$\Delta = \frac{0.0069 \cdot w \cdot L^4 \cdot Cd}{E \cdot I}$	$R_e = 0.4 \cdot w \cdot L$ $R_i = 1.1 \cdot w \cdot L$

Concentrated Loads

Concentrated loads, such as those due to construction or maintenance workers, should be evaluated based on the deck section properties and material strengths.

Suspended Loads

The engineer of record should evaluate suspended or hanging loads attached directly to the roof deck on the basis of the project conditions. The specific method of attachment will determine the load distribution or effective width of deck to be used in the evaluation.

Cantilevered Deck

The length of Verco roof deck cantilevers can be determined by evaluating section properties and material strengths. Consider construction or maintenance workers and materials attached to the deck, particularly with regard to deflection. Attach cantilevers to supports prior to loading. See Figure 1.

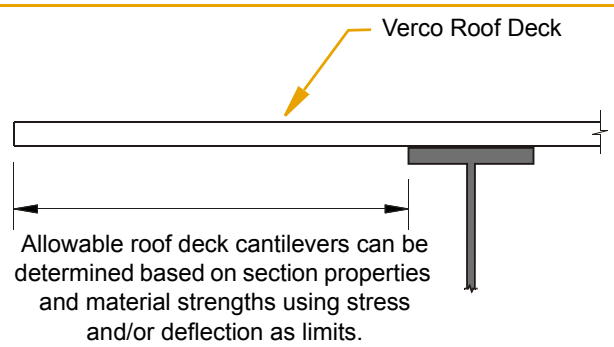

FIGURE 1

Factory Mutual

Verco PLBFM and HSBFM Roof Decks are Factory Mutual approved as: STEEL ROOF DECKS, Class I fire and I-60 or I-90 Windstorm Rated (minimum). See Table 1 for Factory Mutual approved spans. Approved spans are measured center-to-center. See "Factory Mutual Approval Guide" for additional information.

Table 1: Factory Mutual Approved Spans (c-c) for PLBFM and HSBFM Roof Decks

Gage	22	20	18
Span (ft-in., *mm*)	6'-1"	6'-7"	7'-9"
	1,854 mm	*2,007 mm*	*2,362 mm*

Wind Uplift

Determine allowable spans to resist uplift forces based on the deck section properties and material strengths. Evaluation may be warranted on specific projects.

Tension strength of arc spot welds should be determined in accordance with the AISI "Specification for the Design of Cold-Formed Steel Structural Members."

Allowable tension strength of Pneutek and Hilti fasteners is based on the specific combination of fastener, substrate thickness, and deck gage. Allowable tension strengths are shown in ICBO ES Report ER-2078P.

ROOF DECK DIAPHRAGMS

The diaphragm shear values in the tables for Verco roof decks are based on attachment of the deck to the perpendicular supports with puddle welds or mechanical fasteners. The attachment patterns for each profile are shown in the illustrations included with the tables.

Diaphragm Load Tables

Designers should observe the following notes when working with these tables:

- Diaphragm shear strengths (q) are the allowable strengths and are not to be increased one-third.
- The flexibility factor (F) is the number of microinches a diaphragm web will deflect in a span of 1 ft (*305 mm*) under a shear load of 1 pound per ft (*14.6 N/m*).
- R is the vertical load span (spacing between supports) (L_V) of the deck divided by the length (L_S) of the deck sheet: $R = L_V / L_S$.
- The flexibility limitations in ICBO ES Report ER-2078P may be used as a guide instead of a rational analysis of the anticipated deflections.
- VSC = Verco Sidelap Connection made with the Verco PunchLok tool on PLB-36 or PLN-24 deck.
- BP = Button punched sidelap connection.
- TSW = 1½ in. (*38 mm*) long top seam weld sidelap connection.
- See Sidelap Connections topic on page 10 for information regarding connection spacing.

- Interpolation of diaphragm strength between adjacent spans is permissible. For interpolated span lengths, use the diaphragm flexibility of the closest span length.
- The ends of PLB-36, HSB-36, PLN-24, and N-24 deck are to be lapped a minimum of 2 inches (*51 mm*).

Composite Deck Diaphragms

Refer to ICBO ES Report ER-2078P for PunchLok system diaphragm values for PLW2-36 and PLW3-36 Formlok composite deck without concrete fill.

Axial Loads

Axial load strength of steel deck can be evaluated in accordance with the AISI "Specification for the Design of Cold-Formed Steel Structural Members."

ATTACHMENT OF ROOF DECK

Support Fastening

The diaphragm shear tables of this catalog include two methods of attaching deck to the supports: welds and mechanical fasteners (pins).

- PLB-36, HSB-36, PLN-24 and N-24 decks are attached to the supports with welds, or
- PLB-36 roof deck is attached to supports with either Pneutek or Hilti fasteners. Fastener selection is based on substrate thickness. Allowable diaphragm shear capacities are determined by the fastener and substrate thickness. See Table 2 on page 8 and Table 3 on page 9 for fastener selection.

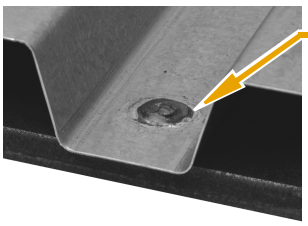

FIGURE 2

Welds: When Verco roof deck is to be welded to supports, the effective fusion area is to be at least ½ in. (*13 mm*) diameter arc spot (puddle) weld (Figure 2) or at least ⅜ in. x 1 in. long (*10 mm x 25 mm*) arc seam weld. Welds are to be spaced as described in the appropriate tables.

Weld washers are not required or recommended for arc spot welds in PLB-36, HSB-36, PLN-24 and N-24 roof deck.

FIGURE 3

Pneutek Pins: When PLB-36 deck is attached to structural supports with Pneutek K66062, K66075, K64062, SDK63075, or SDK61075 fasteners, they are to be installed as shown in Figure 3. The Pneutek fasteners have ½ inch (*12.7 mm*) diameter heads. See ICBO ES Report ER-3829 for additional information on the fasteners.

Fasteners must be driven with the Pneutek® Air/Safe® fastening system to ensure tight contact between the fastener head and the attached deck as shown in Figure 4. Fasteners shall be located not less than 1 inch (*25 mm*) from the end of the sheets.

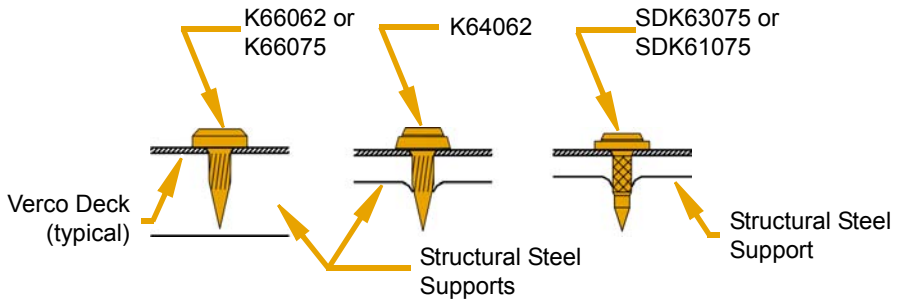

FIGURE 4

Select the appropriate fastener based on the actual substrate thickness. This will determine the allowable diaphragm shears and flexibility factors for PLB-36 roof deck attached to supports with Pneutek fasteners. Note that K66075 pins are to be used for attachment of four layers of 20 gage deck or three or four layers of 18 or 16 gage deck.

Table 2: Pneutek Fastener Selection

Substrate Thickness in. (*mm*)	Pneutek Fastener Designation	Allowable Diaphragm Shear Values (q) and Flexibility Factors (F)
0.281 and thicker (*7.1 and thicker*)	K66062 or K66075	See Pages 30 and 31
0.187 to 0.312 (*4.7 to 7.9*)	K64062	
0.155 to 0.250 (*3.9 to 6.4*)	SDK63075	See Pages 32 and 33
0.113 to 0.155 (*2.9 to 3.9*)	SDK61075	See Pages 34 and 35

Hilti Pins: When PLB-36 deck is fastened to the structural supports with Hilti X-EDN19-THQ12 or X-EDNK22-THQ12 fasteners, they are to be installed as shown in Figure 5. Hilti fasteners have a dome style head and a 15⁄32 inch (*11.8 mm*) diameter steel flat washer and a steel top hat washer. See ICBO ES Report ER-4373 or ER-6033 for additional information on the fasteners. Proper penetration of the Hilti fasteners into structural supports is shown in Figure 5. Fasteners shall be located not less than 1 inch (*25 mm*) from the end of the sheets.

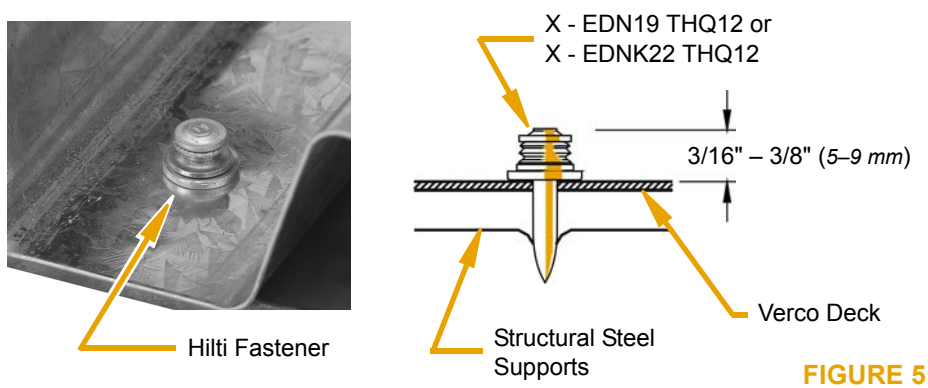

FIGURE 5

Select the appropriate fastener based on the actual substrate thickness. This will determine the allowable diaphragm shears and flexibility factors for PLB-36 roof deck attached to supports with Hilti fasteners.

Table 3: Hilti Fastener Selection

Substrate Thickness in. (*mm*)	Hilti Fastener Designation	Allowable Diaphragm Shear Values (q) and Flexibility Factors (F)
0.313 to ⅜ (*8.0 to 9.5*)	X-EDN19 THQ12	Pages 36 and 37
0.250 to 0.313 (*6.4 to 8.0*)	X-EDN19 THQ12	Pages 38 and 39
0.188 to 0.250 (*4.8 to 6.4*)	X-EDNK22 THQ12	Pages 36 and 37
⅛ to 0.188 (*3.2 to 4.8*)	X-EDNK22 THQ12	Pages 40 and 41

ShearTranz® Systems: Verco introduced the use of restraining elements to increase roof deck diaphragm strength and rigidity with the ShearTranz system. The ShearTranz family of products now includes the following:

- 14 gage ShearTranz II-42 elements are used with PLB-36 deck with sidelaps connected using the PunchLok system.
- 16 gage ShearTranz II elements are used with HSB-36 deck with sidelaps connected using button punches or top seam welds.
- 16 gage original ShearTranz system is used with HSB-36 deck with sidelaps connected using button punches or top seam welds. The original ShearTranz elements are also used in System 80 in conjunction with HSB-36 deck and insulating fill.
- 16 gage ShearTranz II-42 elements are used with HSB-36 and HSB-36-SS deck attached to supports using Hilti pins. See ICBO ES Report ER-6033 for information.

The ShearTranz elements are used at shear collecting support elements perpendicular to the deck corrugations. When ShearTranz II-42 or ShearTranz II elements are used, the deck does not need to terminate at the support as it may be cantilevered.

End laps at supports must be at least 2 inches (*51 mm*) and fastened to supports with arc spot puddle welds. ShearTranz system installation details are shown on pages 58 and 59. See page 63 for System 80 details.

Sidelap Connections

Verco roof decks are to be fastened at the sidelap by one of four methods: the PunchLok tool, 1½"(*38 mm*) long top seam welds, button punches, or #10 x ¾ in. (*19 mm*) long screws. Spacing of sidelap connections shall be as specified.

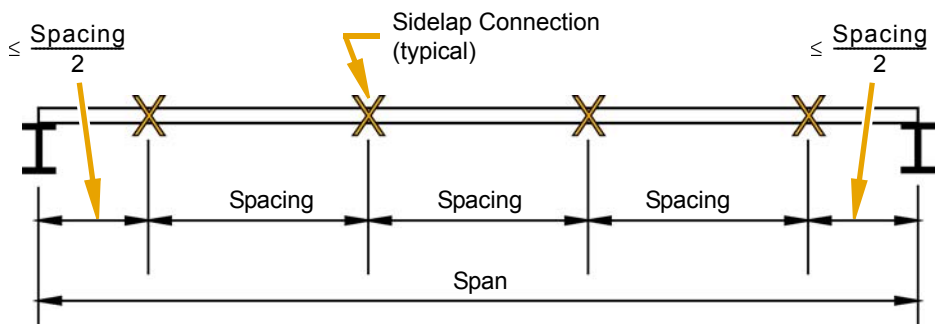

FIGURE 6

The dimension from the centerline of the supports to the first and last sidelap connection within each span is to be no more than one half the specified spacing as shown in Figure 6. The number of connections per span based on spacing are noted in Table 4.

Table 4: Number of Sidelap Connections per Span Based on Spacing

Spacing in. (*mm*)	Span (ft-in., *mm*)												
	4'-0" *1,220*	5'-0" *1,520*	6'-0" *1,830*	7'-0" *2,130*	8'-0" *2,440*	9'-0" *2,740*	10'-0" *3,050*	11'-0" *3,350*	12'-0" *3,660*	13'-0" *3,960*	14'-0" *4,270*	15'-0" *4,570*	16'-0" *4,880*
24 (*610*)	2	3	3	4	4	5	5	6	6	7	7	8	8
18 (*457*)	3	4	4	5	6	6	7	8	8	9	10	10	11
12 (*305*)	4	5	6	7	8	9	10	11	12	13	14	15	16
8 (*203*)	6	8	9	11	12	14	15	17	18	20	21	23	24
6 (*152*)	8	10	12	14	16	18	20	22	24	26	28	30	32
4 (*102*)	12	15	18	21	24	27	30	33	36	39	42	45	48

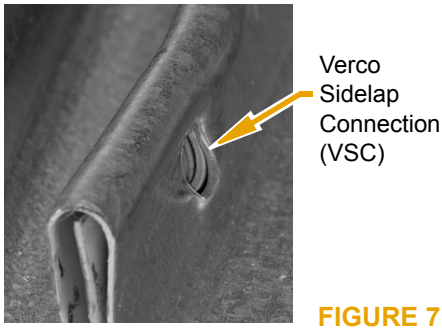

FIGURE 7

PunchLok® System: Connect sidelaps of the PLB-36 and PLN-24 roof decks with the Verco PunchLok tool. The PunchLok tool creates a positive connection between the male and female lips of the PLB-36 or PLN-24 roof deck. The connection made by the PunchLok tool is referred to as the VSC (Verco Sidelap Connection). An acceptable VSC connection has been made when the sidelap material has been sheared and offset so the sheared surface of the male leg is visible (Figure 7).

The VSC connection may be made in either direction.

Top Seam Welds: When sidelaps of the HSB-36 and N-24 roof deck are connected with top seam welds (TSW) (Figure 8), the 1½ in. (*38 mm*) long weld must engage the top of the inner (male) leg. Clinch the joint before welding to create contact between the lips.

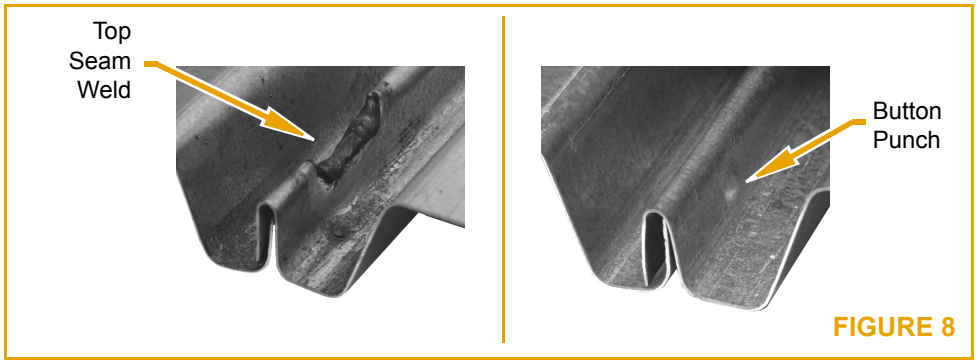

FIGURE 8

Button Punches: When sidelaps of the HSB-36 and N-24 roof deck are connected with button punches (Figure 8), an average-sized person should be able to stand (not jump) on the flute adjacent to the attachment without the joint separating.

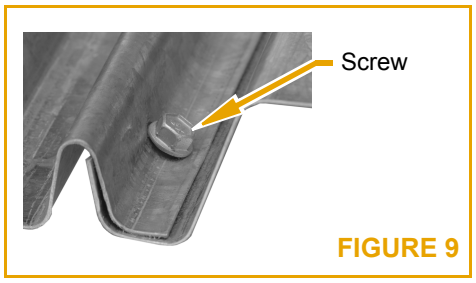

FIGURE 9

Screws: When self-drilling, self-tapping screws are used to connect the sidelaps of HSB-36-SS and N-24-SS roof decks, they are to be minimum #10 x ¾ in. (*19 mm*) long. The diaphragm shear values and flexibility factors for deck fastened with screws are the same as those shown for button punched sidelaps. The screws are to be placed at the same spacing as the button punch spacing. The "SS" designation indicates deck provided with extended female lip for screw fastening.

Parallel Collectors

Spacing of the attachments at collectors parallel to the deck ribs is based on the type of attachment being used. The maximum spacing of attachments at parallel collectors is 3 ft (*914 mm*).

Arc Spot Welds: Spacing of arc spot welds at collectors parallel to the deck ribs should be based on the shear to be transferred. Table 5 lists allowable shear strength in pounds (*newtons*) for ½ in. (*13 mm*) effective diameter welds.

Table 5: Allowable Shear Strength per Weld

Deck Gage	lb	*N*
22	1047	*4,657*
20	1257	*5,591*
18	1673	*7,442*
16	2093	*9,310*

Fillet Welds: Spacing of fillet welds used at collectors parallel to the deck flutes should be based on the shear to be transferred. Allowable strength of fillet welds is determined in accordance with AWS D1.3.

Pneutek Pins: Spacing of Pneutek fasteners at collectors parallel to the deck ribs should be based on the shear to be transferred. Table 6 lists allowable strengths in pounds (*newtons*) for Pneutek fasteners. Shear capacity is based on the specific combination of fastener, substrate thickness, and deck gage.

Table 6: Allowable Shear Strengths for Pneutek Fasteners (lb, *N*)

Substrate Thickness in. (*mm*)	Pneutek Fastener Designation	Deck Gage			
		22	20	18	16
0.281 and thicker (*7.1 and thicker*)	K66062 or K66075	733 *3,261*	880 *3,914*	1171 *5,209*	1465 *6,517*
0.187 to 0.312 (*4.7 to 7.9*)	K64062				
0.155 to 0.250 (*3.9 to 6.4*)	SDK63075				
0.113 to 0.155 (*2.9 to 3.9*)	SDK61075	477 *2,122*	573 *2,549*	763 *3,394*	954 *4,244*

Hilti Pins: The spacing of Hilti fasteners at all collectors parallel to deck flutes is to be the same as the spacing of the sidelap connections. If the required shear transfer between the deck and an interior collector element parallel to the deck flutes exceeds the shear strength of the diaphragm, space two Hilti fasteners the same as the sidelap fasteners.

VERCO ROOF DECK FINISHES

Verco roof decks are offered in various finishes:

Primer Painted

Acrylic primer is applied to cold rolled steel (ASTM A 1008, formerly ASTM A 611) that has been cleaned and chemically pre-treated. The gray acrylic primer is applied by a roller coat process and oven cured. Verco gray primer is approved by UL for use in fire-rated assemblies. Refer to page 18 for specific listings.

Primer paint is intended to protect steel deck for a short period of exposure in ordinary atmospheric conditions. It should be considered as an impermanent and provisional coating.

Galvanized

Cold rolled zinc coated steel (ASTM A 653) with coating designation G60 (*Z180*) is the standard zinc coated material of the deck industry. Coating designation G90 (*Z275*) is a heavier, more costly zinc coating often specified for exposed exterior applications or other project specific requirements.

Galvanized with Primer

Galvanized roof deck is available with factory gray or double white (double thickness for better coverage and whiter white) primer applied to the side of the deck exposed to view. Primed galvanized deck is suitable for applications where the deck will be field-painted (eliminates the need for field priming) or must meet other specific requirements. You have the option to leave the primer paint exposed and eliminate finish paint.

Custom color primers are available. Contact your Verco representative regarding availability.

Exposed Product Appearance

Roof deck is a structural product. Minor dents and scratches which do not affect the structural capacity of the deck are acceptable.

Packaging

Deck to be exposed to view should be identified on the contract drawings so it can be appropriately packaged and handled.

ROOF DECK PRODUCT SELECTION

Spans

Span length is one of the key factors in determining an appropriate roof deck profile. Determine logical span lengths (three span minimum if possible) based on the bay size. Contact your Verco representative regarding the availability of deck lengths greater than 40 ft (*12,190 mm*). Consider handling the weight of the deck during installation when evaluating long deck lengths, especially heavier gages. Also see the Roof Deck Design Example on page 14.

Roofing

Verco roof deck is a structural product resisting horizontal and vertical loads. Normally, insulation and roofing is applied over Verco roof deck. However, it can be used for walkways, canopies, sunshades, or other structures which do not require a watertight roof.

Fire-Rated Verco Roof Deck

Verco roof decks may be used in assemblies which are required to meet hourly fire ratings. Hourly fire ratings may be obtained by:

- Placing insulating concrete fill, with or without insulation board, over the top of the deck;
- Applying fireproofing to the underside of the deck; or
- Installing a fire-rated ceiling system.

Refer to page 18 for a listing of UL fire-rated assemblies utilizing Verco roof deck profiles. Refer to the particular UL assembly being considered for full details of construction, including specific information about fill or fireproofing thicknesses and span limitations.

Venting Verco Roof Deck

Verco roof deck is available with factory punched vent tabs to provide positive venting (see Figure 10). Determine venting requirements based on the specific materials installed over the deck. Some leakage during insulating fill placement should be anticipated with vented deck. Vent tabs projecting upwards are staggered in interior low flutes at approximately 6 in. (*152 mm*) on center:

- 5 rows in PLB-36 and HSB-36.
- 2 rows in PLN-24 and N-24.

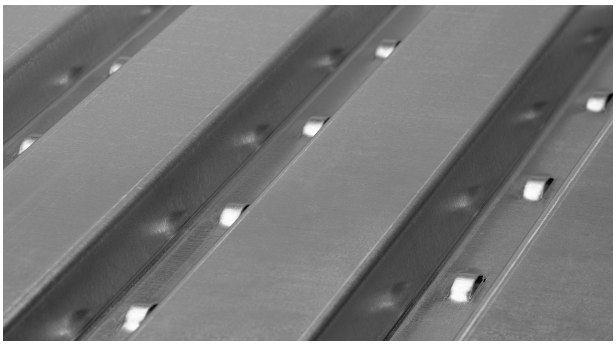

FIGURE 10

Acoustical Roof Deck

PLB-36, HSB-36, PLN-24, and N-24 roof decks are available as acoustical deck. Acoustical deck can provide sound attenuation in buildings where the deck is exposed to the interior. Acoustical uses are limited to non-fire-resistive assemblies. The roofing contractor should install the acoustical insulation furnished with the deck before placement of roof insulation as shown in Figure 11. Noise reduction coefficient (NRC) values in Table 7 were determined by tests in accordance with ANSI/ASTM C423 conducted by Riverbank Acoustical Laboratory. Test reports furnished upon request.

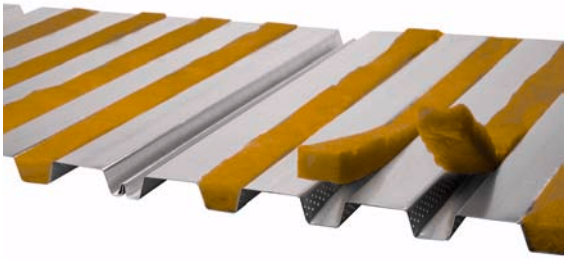

B Acoustical Deck

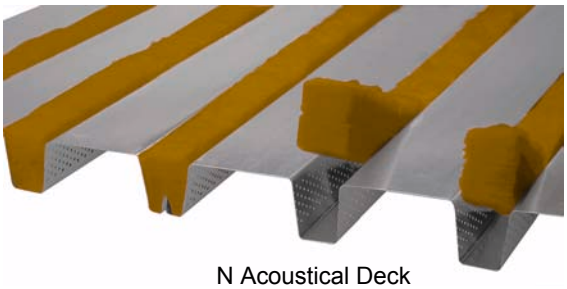

N Acoustical Deck

FIGURE 11

Table 7: Noise Reduction Coefficients of Acoustical Deck

Profile	Absorption Coefficients						Noise Reduction Coefficient
	125	250	500	1000	2000	4000	
PLB-36 or HSB-36	0.60	0.99	0.92	0.79	0.43	0.23	0.80
PLN-24 or N–24	0.58	1.00	0.94	0.85	0.54	0.27	0.85

ROOF DECK DESIGN EXAMPLE

This design example illustrates the basic issues involved in the design and selection of Verco roof deck. Various choices are outlined for each point to be considered. *This example illustrates the issues, not all of the possible options.* If you have additional questions, please contact the Verco Engineering Department.

Design Goals

The design goals for this example are as follows:

- Resist specified uniform vertical loads
- Resist specified horizontal diaphragm loads
- Select an economical roof deck system

Given: 40'-0" x 30'-0" *(12,190 mm x 9,140 mm)* bay size – deck oriented parallel to 40 ft (*12,190 mm*) dimension
Perimeter walls provide lateral restraint
Fire rating not required
Underside of deck exposed to view from interior
Loads:

Dead Load	15 psf (*718 N/m²*)
Live Load	20 psf (*958 N/m²*)
Total Vertical Load	35 psf (*1,676 N/m²*)
Maximum diaphragm shear	565 plf (*8.25 kN/m*)
Average flexibility factor required	24.0 (*137.0*)

Span Options

Spacing between the beams or joists will suggest the deck profile options. Refer to "Spans" on page 13 for more information. Based on the profile options, determine the minimum gages to meet vertical load requirements.

1. 10'-0" (*3,050 mm*) c-c spans

   Choices: 22 gage PLN-24 roof deck or 18 gage PLB-36 roof deck

2. 8'-0" (*2,440 mm*) c-c spans
   Choice: 20 gage PLB-36 roof deck

3. 6'-8" (*2,030 mm*) c-c spans
   Choices: 22 gage PLB-36 roof deck

Selection: Option 1 is the most expensive deck choice, but minimizes the number of supports. Option 2 optimizes deck gage based on span. Option 3 minimizes the deck cost but requires the most supports.

Diaphragm Attachment Options

Determine the minimum deck gage and minimum attachments necessary to meet the specified requirements for maximum horizontal diaphragm strength (q). Verify that the horizontal deflection of the diaphragm is within acceptable limits. For purposes of this example, the average required F has been defined to allow a comparison of the options presented, all of which meet the average required F.

In general, using a lighter gage deck with more attachments is more economical than using a heavier gage deck with fewer attachments. When considering attachments, sidelap connections are generally the most expensive aspect of an attachment system. Therefore, choose the PunchLok system, which minimizes installation time as well as labor and inspection costs of the sidelap attachments, compared to top seam welds.

1. 10'-0" (*3,050 mm*) c-c spans
   Attachment Choices:

Deck	Supports Type	Supports Pattern	Sidelaps Type	Sidelaps Spacing	q	F
3" Deep Roof Deck						
22 ga PLN-24	Weld	24/4	VSC	6" O.C. (*152 mm*)	596 (8.70)	6.7+39R=19.7 (*38.3+223R=112.6*)
20 ga PLN-24	Weld	24/4	VSC	18" O.C. (*457 mm*)	576 (*8.41*)	15.2+26R=23.9 (*86.8+148R=136.1*)
1½" Deep Roof Deck						
18 ga PLB-36	Pneutek	36/7	VSC	24" O.C. (*610 mm*)	866 (*12.64*)	11.6+2R=12.3 (*66.2+11R=69.9*)
18 ga PLB-36	Hilti	36/7	VSC	12" O.C. (*305 mm*)	742 (*10.83*)	11.8+10R=15.1 (*67.4+57R=86.4*)
18 ga PLB-36	Weld	36/4	VSC	24" O.C. (*610 mm*)	796 (*11.62*)	17.5+16R=22.8 (*99.9+91R=130.2*)

2. 8'-0" (*2,440 mm*) c-c spans
   Attachment Choices:

Deck	Supports Type	Supports Pattern	Sidelaps Type	Sidelaps Spacing	q	F
1½" Deep Roof Deck						
20 ga PLB-36	Pneutek	36/7	VSC	24" O.C. (*610 mm*)	720 (*10.51*)	12.5+6R=14.5 (*71.4+34R=82.7*)
20 ga PLB-36	Hilti	36/7	VSC	18" O.C. (*457 mm*)	606 (*8.84*)	15.3+21R=22.3 (*87.4+120R=127.4*)
20 ga PLB-36	Weld	36/5	VSC	24" O.C. (*610 mm*)	650 (*9.49*)	15.1+19R=21.4 (*86.2+108R=122.2*)

3. 6'-8" (*2,030 mm*) c-c spans (Values shown for 7'-0" [*2,130 mm*] spans.)
   Attachment Choices:

Deck	Supports Type	Supports Pattern	Sidelaps Type	Sidelaps Spacing	q	F
1½" Deep Roof Deck						
22 ga PLB-36	Pneutek	36/7	VSC	24" O.C. (*610 mm*)	653 (*9.53*)	12.1+14R=16.8 (*69.1+80R=95.8*)
22 ga PLB-36	Hilti	36/7	VSC	12" O.C. (*305 mm*)	609 (*8.89*)	9.2+35R=20.9 (*52.5+200R=119.2*)
22 ga PLB-36	Weld	36/5	VSC	6" O.C. (*152 mm*)	694 (*10.13*)	12.6+34R=23.9 (*71.9+194R=136.6*)
22 ga PLB-36	Weld	36/7	VSC	24" O.C. (*610 mm*)	592 (*8.64*)	8.8+12R=12.8 (*50.2+69R=73.2*)

Notes:

- F is based on R = ⅓ for 3 span sheets.
- Pneutek values listed assume a substrate thickness of 0.187 in. (*4.7 mm*) and thicker. Hilti values listed assume a substrate thickness of 0.188 – 0.250 in. (*4.8 – 6.4 mm*) or 0.313 – ⅜ in. (*8.0 – 9.5 mm*).

- Values shown are those necessary to meet the maximum shear (q) and average Flexibility Factor (F) specified. Maximum economy can be achieved by zoning the diaphragm, reducing deck gage and/or attachments as shear requirements diminish across the building.
- Gages shown meet minimum gages noted above for vertical loads even though lighter gages may meet shear requirements.
- Attachment of deck to parallel chords is required but not shown.

→ **Selection:** Given the various considerations, the 20 gage 1½ in. (*38 mm*) deep PLB-36 deck on 8'-0" (*2,440 mm*) spans would provide the optimal roof system. When selecting the attachment system, consider the use of mechanical fasteners (pins) in conjunction with the PunchLok system to minimize installation labor and inspection costs, and minimize or eliminate the need for touch-up of the deck and support structure. Together, these benefits offer an economical deck system which can be installed in a minimum amount of time.

Finish Options

Options are listed in order of increasing deck cost. The total installed cost, including field painting, should be used to determine the deck finish choice.

1. Painted.
2. Galvanized.
3. Galvanized and painted underside.

→ **Selection:** Since deck underside is exposed to view, the costs of field painting make Options 1 and 2 more expensive. Therefore choose Option 3 with Verco Double White primer left exposed to view.

Specification Considerations

Specifications should indicate deck is exposed so that proper packaging can be provided.

Architectural Considerations

The end use or aesthetics of the structure may influence the roof deck system selection and should be considered in addition to vertical and horizontal load requirements. Since the deck is exposed, consideration of the benefits of acoustical deck compared to the added costs may be appropriate.

Fire Ratings

Hourly fire ratings, if required, may affect the maximum allowable deck span and/or minimum deck gage. Refer to the UL Fire Resistance Directory or ICBO ES Report ER-2078P for Verco Steel Decks for further information. Finish Option 1. Painted or 2. Galvanized should be selected for fire-rated systems.

Roof Deck Fire Resistance Ratings

Table 8

RESTRAINED ASSEMBLY RATING (HR)	UL #	FRAME	SYSTEM	DECK[1]						GALVANIZED	PAINTED	PROTECTED[2]
				B	N	W2	W3	VERCOR	SYSTEM 80			
¾–2	P701	Beam/Joist	Deck/Board	✓	✓					Yes	Yes	CEM
1–2	P711	Beam/Joist	Deck/Board	✓	✓					Yes	Yes	CEM
1–2	P717	Beam/Joist	Deck/Board	✓	✓					Yes	Yes	CEM
1–3	P719	Beam/Joist	Deck/Board	✓	✓	✓				Yes	Yes	CEM
¾–2	P726	Beam/Joist	Deck/Board	✓	✓					Yes	No	CEM
1-3	P732	Beam/Joist	Deck/Board	✓	✓					Yes	Yes	CEM
¾–2	P734	Beam/Joist	Deck/Board	✓	✓					Yes	Yes	CEM
1–2	P736	Beam/Joist	Deck/Board	✓	✓					Yes	Yes	CEM
1–2	P739	Beam/Joist	Deck/Board	✓	✓					Yes	Yes	CEM
1–2	P740	Beam/Joist	Deck/Board	✓	✓					Yes	Yes	CEM
1–2	P742	Beam/Joist	Deck/Board	✓	✓					Yes	Yes	CEM
1–2	P815	Beam/Joist	Deck/Board	✓	✓					Yes	Yes	SF
1–2	P816	Beam/Joist	Deck/Board	✓	✓					Yes	Yes	SF
1–2	P818	Beam/Joist	Deck/Board	✓	✓	✓	✓			Yes	Yes	SF
1–2	P907	Beam/Joist	Insulating Concrete					✓		Yes	No	No
1–2	P908	Beam/Joist	Insulating Concrete					✓		Yes	No	No
1–2	P920	Beam/Joist	Insulating Concrete	✓	✓	✓				Yes	No	No
1–2	P921	Beam/Joist	Insulating Concrete	✓	✓	✓		✓	✓	Yes	No	No
1–2	P922	Beam/Joist	Insulating Concrete	✓	✓	✓		✓	✓	Yes	No	No
1–2	P923	Beam/Joist	Insulating Concrete	✓	✓	✓		✓	✓	Yes	No	No
1–2	P925	Beam/Joist	Insulating Concrete	✓	✓	✓		✓	✓	Yes	No	No
1–2	P926	Beam/Joist	Insulating Concrete					✓		Yes	No	No
1–2	P927	Beam/Joist	Insulating Concrete					✓		Yes	No	No
1–2	P928	Beam/Joist	Insulating Concrete	✓	✓	✓		✓	✓	Yes	No	No
1–2	P929	Beam/Joist	Insulating Concrete	✓	✓	✓		✓	✓	Yes	No	No
1–2	P930	Beam/Joist	Insulating Concrete	✓	✓	✓		✓	✓	Yes	No	No
1–2	P936	Beam/Joist	Insulating Concrete	✓	✓	✓		✓	✓	Yes	No	No

[1] "B" = PLB and HSB; PLB and B FORMLOK
"N" = PLN and N; PLN and N FORMLOK
"W2" = PLW2 and W2 FORMLOK
"W3" = PLW3 and W3 FORMLOK
"VERCOR" = 1 5/16 Deep VERCOR

[2] Spray-applied fire resistive materials: Cementitious (CEM), Sprayed Fiber (SF)

References:

UL Fire Resistance Directory (2003 edition used above)
ICBO ES Report ER-2078P for Verco Steel Deck
City of Los Angeles Research Report RR23789

Notes:

1. Refer to UL Fire Resistance Directory, ICBO ES Report ER-2078P for Verco Steel Deck, or municipality requirements for full details of construction, including usage limitations and mesh requirements.
2. Code compliant VERCO gray primer paint is formulated for compatibility with spray-applied fireproofing.
3. Also see various UL assemblies for "unclassified" listings that may apply to VERCO decks.
4. VERCO MANUFACTURING CO. assumes no responsibility for adhesion of any spray-applied fireproofing material, nor for any treatment, cleaning, or surface preparation of the deck surface required for adhesion of fire protection material.
5. Protected assemblies have spray-applied fireproofing applied directly to the underside of the deck. Unprotected (D9XX Series) assemblies do not require spray-applied fireproofing applied to the underside of the deck.
6. Sidelap fastening with the PunchLok® tool, button punches, or seam welds is required for fluted decks except for P717, P719, P739, P923, and P929 which also allow screws.

Roof Deck Accessories

Neoprene Closures

- Individual plugs 1 in. (*25 mm*) thick

PLB-36/HSB-36

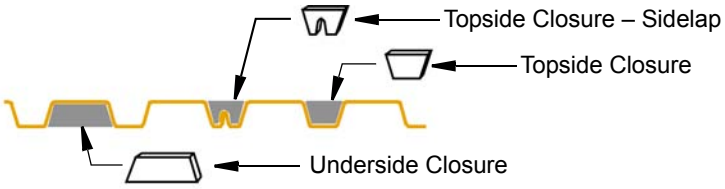

PLN-24/N-24

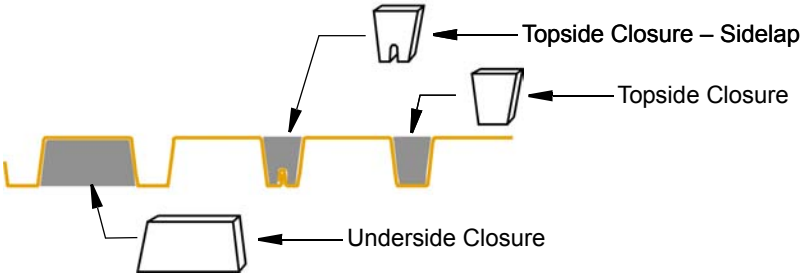

Steel Profile Closures

- 22 gage

PLB-36/HSB-36

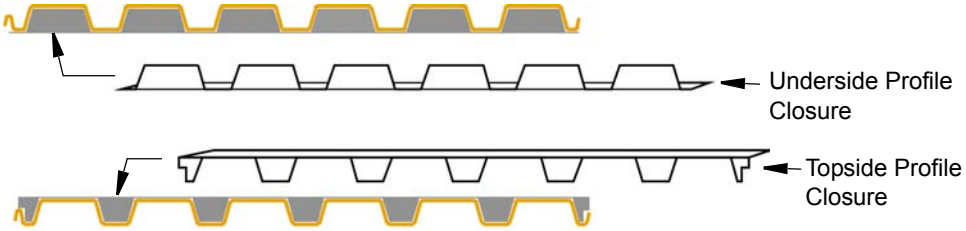

PLN-24/N-24

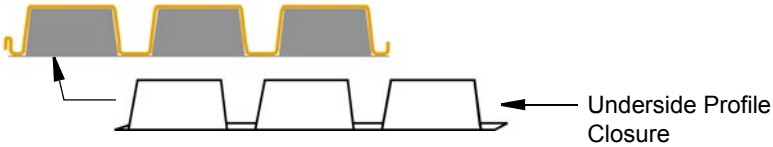

Sump Pan

- 14 gage
- Flat recessed

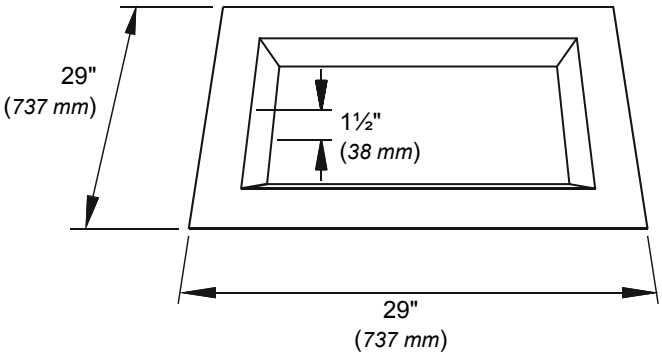

Specification 05311 Steel Roof Deck

TECH GUIDE

Short Form

Steel Roof Deck shall be manufactured and labeled by Verco in depths and gages shown on the structural drawings. Deck and accessories shall be formed of either (select one) galvanized or primer painted steel conforming to current ASTM criteria. Interlocking sidelaps are formed with standing seam allowing connection with PunchLok® tool (insert Top Seam Welds **OR** Button Punches **OR** Screws, if the PunchLok® system is not utilized). Attachments to comply with diaphragm shear requirements shown on structural drawings and in accordance with ICBO ES Report ER-2078P of the International Conference of Building Officials.

Standard Form CSI 3-Part Section Format	Notes To Specifier
PART 1 -- GENERAL	
1.01 WORK INCLUDED	
A. The extent of steel decking is shown on the drawings, including basic layout, types of deck units, and attachment required.	
1.02 RELATED WORK SPECIFIED ELSEWHERE	
A. Structural Steel Framing: Section 05100.	
B. Rigid Insulation: Section 07240.	For installation over roof deck.
OR	
B. Insulating Concrete: Section 03341.	
C. Roofing: Section 07500.	
D. Painting: Section 09900.	For field painting of deck if factory primer painted deck is to be finish painted after installation.
E. Flashing and Sheet Metal: Section 07600.	
F. Fireproofing: Section 07250.	
1.03 WORK FURNISHED BUT NOT INSTALLED	
A. Acoustical batts: Section 07500.	For installation by roofing contractor. Delete if not acoustical deck.
1.04 QUALITY ASSURANCE	
A. Codes and Standards:	
1. AISI, "Specification for the Design of Cold-Formed Steel Structural Members."	American Iron & Steel Institute.
2. AWS D1.3, "Structural Welding Code – Sheet Steel."	American Welding Society
3. ASTM, designations as specified.	American Society for Testing & Materials.
4. ICBO ES Report ER-2078P.	International Conference of Building Officials.
5. Factory Mutual Approval Guide.	Delete if not PLBFM or HSBFM deck or if Factory Mutual approval is not required.
6. 1997 Uniform Building Code, Chapter 22, Division VII, Chapter 22, or 2000 International Building Code, Chapter 22, Specification for the Design of Cold-Formed Steel Structural Members.	
1.05 PERFORMANCE REQUIREMENTS	
A. Diaphragm Shear Capacity: The gage, attachment to supports, and PunchLok® sidelap connections (VSC) of the deck are designed to provide a diaphragm shear capacity and flexibility in accordance with ICBO ES Report ER-2078P. Other ICBO approved systems will be acceptable as an equal only if they meet the required diaphragm shear capacity and flexibility shown on the structural drawings. The proposed sidelap connection shall be hazard-free with no exposed sharp edges that can cut cables or hoses, and shall allow measurement-free visual inspection.	Delete if PunchLok® system not utilized. VSC = Verco Sidelap Connection made with the PunchLok® tool.

Standard Form CSI 3-Part Section Format (cont.)	Notes to Specifier (cont.)
B. Factory Mutual Listing: Provide PLBFM or HSBFM Roof Deck units which have been evaluated by Factory Mutual and are listed in the Factory Mutual Approval Guide for "Class 1" fire rated construction.	Delete if Factory Mutual approval is not required.
1.06 SUBMITTALS	
A. Shop Drawings:	
1. Deck layout, framing, and supports, with dimensions, and sections.	
2. Type and location of attachments.	
3. PunchLok® sidelap connection spacing.	Delete if the PunchLok® system is not utilized and insert Top Seam Welds **OR** Button Punches **OR** Screws.
4. Details of accessories.	
5. Deck manufacturer with profiles, properties, vertical loads, shear capacities, and flexibility factors.	
1.07 PRODUCT DELIVERY, STORAGE AND HANDLING	
A. Steel Deck	
1. Do not bend or mar decking.	
2. Store off ground with one end elevated for drainage.	
3. Cover with waterproof material, ventilated to avoid condensation.	
4. Architecturally exposed deck shall be appropriately packaged or protected to minimize damage during shipment.	Delete if deck is used for normal structural applications not requiring special packaging and handling.
B. Acoustic Insulation	Delete if not acoustical deck.
1. Store in enclosed area protected from weather.	
PART 2 – PRODUCTS	
2.01 MATERIALS	
A. Cold Rolled Steel: ASTM A 611, Grade C, or ASTM A 1008, SS, Grade 33 minimum, minimum yield 38 ksi.	For primer painted deck. Delete if PLN™-24 or N-24.
1. Primer painted finish: Acrylic primer applied to steel which has been cleaned and chemically pretreated. The gray primer is applied by a roller coat process and oven cured having a 0.3 mil nominal dry film thickness each side.	
**** OR ****	
A. Galvanized Steel: ASTM A 653, SS, Grade 33, minimum yield 38 ksi.	For galvanized deck. Delete if PLN™-24 or N-24.
1. Zinc coated per ASTM A653, G60.	
2. Factory Primer Painted Gray: The gray primer is applied by a roller coat process and oven cured having a 0.3 mil nominal dry film thickness on side exposed to view.	Select if gray primer over galvanized.
**** OR ****	
2. Factory Primer Painted Double White: The double thickness white primer is applied by a roller coat process and oven cured having a 0.6 mil nominal thickness on side exposed to view.	Select if double white primer over galvanized.
**** OR ****	
A. Galvanized Steel: ASTM A 653, SS, Grade 80	For galvanized Deep VERCOR™ deck.
1. Zinc coated per ASTM A653, G90.	

Standard Form CSI 3-Part Section Format (cont.)

B. Acoustical Insulation Batts: Glass fiber strips cut to proper width.

2.02 FABRICATION

A. General: Form deck units in lengths to span 3 or more supports, with 2" minimum end laps and interlocking sidelaps formed with standing seam allowing connection with PunchLok® tool.

B. Roof Deck Units: Provide deck configurations manufactured and labeled by Verco as follows:

1. Type PLB™-36, __ gage, 36" wide, 1½" deep, having minimum I = __ in^4, S =__ in^3 with ShearTranz® II-42.

**** OR ****

1. Type HSB®-36, ___ gage, 36"wide, 1½" deep, having minimum I = ___ in^4 and S = ___ in^3 with ShearTranz® II **** OR **** ShearTranz®.

**** OR ****

1. Type HSB®-36-SS, ___ gage, 36"wide, 1½" deep, having minimum I = ____ in^4 and S = ____ in^3 with ShearTranz® II **** OR **** ShearTranz®.

**** OR ****

1. Type PLN™-24, ___ gage, 24" wide, 3" deep, having minimum I = ____ in^4 and S = ____ in^3.

**** OR ****

1. Type N-24, ___ gage, 24" wide, 3" deep, having minimum I = ____ in^4 and S = ____ in^3 with ShearTranz®.

**** OR ****

1. System 80, ____ gage, 36" wide, 1½" deep, having minimum I = ___ in^4 and S = ___ in^3. Provide factory punched vent tabs projecting upwards in interior bottom flanges at approximately 6" on center and ShearTranz® at shear collectors.

**** OR ****

1. Deep VERCOR™, ___ gage, 36" wide, 1⅚" deep, having minimum I = ____ in^4 and S = ____ in^3 with VentLok louvers in each web ****OR**** sidelap vents at approximately 10" on center.

C. Acoustical Deck

1. Type ____ deck.
Vertical webs except at side joint perforated with 5⁄32" diameter holes on staggered 7⁄16" centers to provide ___ Noise Reduction Coefficient. NRC of completed assembly shall be as determined by tests in accordance with ASTM designation C423 conducted by Riverbank Acoustical Laboratories.

2.03 ACCESSORIES

A. Metal Accessories: Same gage as decking except where noted on drawings.

B. Steel profile closures.

Notes to Specifier (cont.)

Delete if not acoustical decking.

Delete if Deep VERCOR™ Deck.
Delete if PunchLok® system not utilized.

Designate gage: 22, 20, 18, or 16.
Designate I & S values.
Delete if not required.

Designate gage: 22, 20, 18, or 16.
Designate I & S values.
Select ShearTranz® system. Delete if not required.
For screw fastened sidelaps. Designate gage: 22, 20, 18, or 16. Designate I & S values.
Select ShearTranz® system. Delete if not required.
Designate gage: 22, 20, 18, or 16.
Designate I & S values.

Designate gage: 22, 20, 18, or 16.
Designate I & S values.
Delete if not required.

Designate gage: 22, 20, or 18.
Designate I & S values.

Designate gage: 26, 24, 22, or 20.
Designate I & S values.
Select type of venting. Delete if not required. 26 gage VentLok not available.
Delete if not acoustical deck.
Select PLB™-36, HSB®-36, PLN™-24, or N-24.
Delete if PLN™-24 or N-24.

Designate 0.80 NRC for PLB™-36 and HSB®-36 or 0.85 for PLN™-24 and N-24.

Delete if not required.

Standard Form CSI 3-Part Section Format (cont.)	Notes to Specifier (cont.)
PART 3 – EXECUTION	
3.01 INSPECTION	
A. Check supporting members for correct layout and alignment.	
B. Verify that surfaces to receive roof deck are free of debris.	
C. Do not proceed with installation until defects are corrected.	
D. Verify deck is labeled for PunchLok® System use.	Delete if PunchLok® system not utilized.
3.02 INSTALLATION	
A. General: Install roof deck units and accessories in accordance with approved shop drawings.	
B. Placing Roof Deck Units:	
1. Position on supporting steel framework and adjust to final position with ends bearing a minimum of 2 in.	
2. Ends of units shall be lapped a minimum of 2 in. over supports.	
3. Mark supports at regular intervals to maintain alignment and proper spacing.	
C. Fastening Deck Units To Supports:	
1. Secure with 1/2 in. effective diameter arc spot welds.	
**** OR ****	
1. Secure with Pneutek fasteners.	PLB™-36 deck only.
**** OR ****	
1. Secure with Hilti fasteners.	PLB™-36 deck only.
**** OR ****	
1. Secure with Buildex screws.	Deep VERCOR™ only.
**** OR ****	
1. Secure to supporting members with plug welds through ⅜" diameter hole in 14 gage weld washer.	Deep VERCOR™ only.
D. Connecting Sidelaps:	
1. Use Verco PunchLok® tool to create interlocking VSC connection at spacing designated on the shop/erection drawings. VSC's may be made in either direction.	Delete if PunchLok® system not utilized. VSC = Verco Sidelap Connection made with the PunchLok® tool.
**** OR ****	
1. Connect sidelap as shown on approved shop/erection drawings.	
3.03 PROTECTION	
A. Do not use deck units for storage or working platforms until permanently secured in position.	
B. Construction loads must not exceed carrying capacity of deck.	
**** End of Section ****	

Metric (SI) Conversions

	US	Multiplied by		= *Metric*
Length	in.	x	25.4	= *mm*
	in.	x	2.54	= *cm*
	ft	x	304.8	= *mm*
	ft	x	30.48	= *cm*
	ft	x	0.3048	= *m*
Area	$in.^2$	x	645.16	= mm^2
	$in.^2$	x	6.4516	= cm^2
	ft^2	x	0.09290304	= m^2
Volume	$in.^3$	x	16,387.06	= mm^3
	$in.^3$	x	16.38706	= cm^3
	ft^3	x	0.02831685	= m^3
Moments of Inertia	$in.^4$	x	416231.4	= mm^4
	$in.^4$	x	41.62314	= cm^4
	$in.^4/ft$	x	1365588	= mm^4/m
	$in.^4/ft$	x	136.5588	= cm^4/m
Section Modulus	$in.^3/ft$	x	53763	= mm^3/m
	$in.^3/ft$	x	53.763	= cm^3/m

	US	Multiplied by		= *Metric*
Mass	oz	x	28.34952	= *g*
	lb	x	0.4535924	= *kg*
	plf	x	1.488164	= *kg/m*
	psf	x	4.882428	= kg/m^2
	pcf	x	16.01846	= kg/m^3
Force	lb	x	4.448222	= *N*
	plf	x	14.5939	= *N/m*
	psi	x	6.894757	= kN/m^2
	psf	x	47.88026	= N/m^2
	in.-lb (in.-kips)	x	0.1129848	= *Nm (kNm)*
	in.-lb/ft (in.-kips/ft)	x	0.3706850	= *Nm/m (kNm/m)*
Flexibility	in./lb x 10^6	x	5.71015	= *mm/N x* 10^6
Galvanizing	oz/ft^2	x	305.15169	= g/m^2
Paint	mil	x	0.0254	= *mm*

Note: "Metric" is the common term used to refer to measurements denoted by the formal term "Standard International" or "SI."

Conversion factors and notation as per IEEE/ASTM SI 10-1997 and common mathematical practices. The values in this catalog were determined in standard US units and soft converted to SI units. Soft conversion denotes the mathematical conversion of standard US units to metric units with little or no rounding.

Allowable uniform loads as well as deck weights are converted to N/m^2 for ease of use in calculations and comparisons. A pascal is equivalent to N/m^2.

Metric Definitions	
m	meter
cm	centimeter
mm	millimeter
g	gram
kg	kilogram
N	Newton
Pa	Pascal

Using the Tables

These illustrations highlight important considerations for using the deck tables. The values in the tables were determined in standard US units and soft converted to SI units. Allowable uniform loads as well as deck weights were converted to N/m^2 for ease of use in calculations and comparisons.

Type PLB™-36/HSB®-36

- **1½" (*38 mm*) Deep Roof Deck**
- **Primer Painted or Galvanized**

Allowable Uniform Load due to stress

ALLOWABLE UNIFORM LOADS (psf, *N/m²*)

			SPAN (ft-in., *mm*)									
SPAN GAGE			4'-0" *1,220*	5'-0" *1,520*	5'-6" *1,680*	6'-0" *1,830*	6'-6" *1,980*	7'-0" *2,130*	7'-6" *2,290*	8'-0" *2,440*	'-6" *2,590*	9'-0" *2,74*
SINGLE	22	STRESS	178 *8,523*	114 *5,458*	94 *4,591*	79 *3,783*	67 *3,208*	58 *2,777*	51 *2,442*	44 *2,107*	39 *1,867*	35 *,6*
		L/240	✦✦✦	92 *4,405*	69 *3,304*	53 *2,538*	42 *2,011*	34 *1,628*	27 *1,293*	22 *1,053*	19 *910*	16 *766*
	20	STRESS	223 *10,677*	143 *6,847*	118 *5,650*	99 *,740*	85 *4,070*	73 *3,495*	64 *3,064*	56 *2,681*	49 *2,346*	44 *2,107*

Allowable Uniform Load due to deflection

How to use the uniform load tables:

1. Determine the total load and the live load for the roof deck.
2. Using the total load, select the gage and the span with equal or greater value for stress.
3. Using the live load, select the gage and the span with equal or greater value for L/240 deflection.
4. Select the gage and the span for the roof deck that meets the criteria of both steps 2 and 3.

Type PLB™-36

- **7 Weld Pattern at Supports**
- **Sidelaps Connected with PunchLok® Tool**
- **Primer Painted or Galvanized**

Allowable Diaphragm Shear Values, q (plf, *kN/m*) and Flexibility Factors, F ((in./lb)x10⁶, (*mm/N*)*x10⁶*)

			SPAN (ft-in., *mm*)						
GAGE	SIDELAP ATTACH-MENT		4'-0" *1,220*	5'-0" *1,520*	6'-0" *1,830*	7'-0" *2,130*	8'-0" *2,440*	9'-0" *2,740*	10'-0" *3,05*
22	VSC @ 24"	q	792 *11.56*	707 *10.32*	620 *9.05*	592 *8.64*	544 *7.94*	535 *7.81*	50 *7.37*
		F	8.1+22R *46.3+126R*	7.8+17R *44.5+97R*	9.2+15R *52.5+86R*	8.8+12R *50.2+69R*	10.0+11R *57.1+63R*	9.5+10R *54.2+57R*	10.5+9R *60.0+51R*
	VSC @ 18"	q	836 *12.20*	743 *10.84*	655 *9.56*	621 *9.06*	599 *8.74*	561 *8.19*	554 *8.09*
		F	6.5+22R *37.1+126R*	6.6+17R *37.7+97R*	7.7+15R *44.0+86R*	7.6+12 *43.4+69R*	7.6+11R *43.4+*	8.4+10R	8.2+9R
		q	873 *12.74*	774 *11.30*	713 *10.41*	673 *9.82*	64		

Sidelap Attachment Type and Spacing (VSC = Verco Sidelap Connection made with PunchLok® tool)

Diaphragm Shear Capacity (q) and **Flexibility Factors** (F) based on sidelaps attached with VSC's at 24" oc and 36/7 weld pattern at supports

(Examples above are from the tables on pages 27 and 46.)

Type PLB™-36/HSB®-36

- **1½" (*38 mm*) Deep Roof Deck**
- **Primer Painted or Galvanized**

VERTICAL LOADS

Dimensions

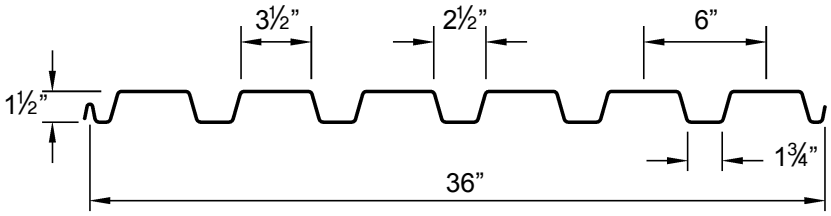

PLB-36/HSB-36

Standard Interlocking Sidelap

HSB-SS-36

Screw Fastened Sidelap

HSB-30 NESTABLE

Overlapping Sidelap Available 30" Wide – Special Order

Deck Weight and Section Properties

	Weight (psf, *N/m²*)		Properties per ft (*m*) of Width			Allowable Reactions per ft (*m*) of Width (lb, *N*)				
						End Bearing			Interior Bearing	
Gage	Galv G60 *Z180*	Painted	**I** in.⁴ *mm⁴*	**+S** in.³ *mm³*	**–S** in.³ *mm³*	2" *51 mm*	3" *76 mm*	4" *102 mm*	3" *76 mm*	4" *102 mm*
22	1.9 *91.0*	1.8 *86.2*	0.175 *238,978*	0.187 *10,054*	0.198 *10,645*	487 *7,107*	585 *8,537*	683 *9,968*	1250 *18,242*	1498 *21,862*
20	2.3 *110.1*	2.2 *105.3*	0.216 *294,967*	0.235 *12,634*	0.248 *13,333*	665 *9,705*	784 *11,442*	903 *13,178*	1790 *26,123*	2118 *30,910*
18	2.9 *138.9*	2.8 *134.1*	0.302 *412,408*	0.322 *17,312*	0.335 *18,011*	1226 *17,892*	1407 *20,534*	1588 *23,175*	3062 *44,687*	3551 *51,823*
16	3.5 *167.6*	3.4 *162.8*	0.377 *514,827*	0.411 *22,097*	0.417 *22,419*	2208 *32,223*	2484 *36,251*	2761 *40,294*	4789 *69,890*	5266 *76,851*

Note: Bending strength limited to 22,800 psi (*157,200 kPa*).

Attachment Patterns to Supports

36/4

36/5

36/6

36/7

Metric Conversions	
1½"	*38 mm*
1¾"	*44 mm*
2½"	*64 mm*
3"	*76 mm*
3½"	*89 mm*
6"	*152 mm*
36"	*914 mm*

Type PLB™-36/HSB®-36

1½" (*38 mm*) Deep Roof Deck
Primer Painted or Galvanized

VERTICAL LOADS

ALLOWABLE UNIFORM LOADS (psf, *N/m²*)

			SPAN (ft-in., *mm*)															
SPAN	GAGE		4'-0" *1,220*	5'-0" *1,520*	5'-6" *1,680*	6'-0" *1,830*	6'-6" *1,980*	7'-0" *2,130*	7'-6" *2,290*	8'-0" *2,440*	8'-6" *2,590*	9'-0" *2,740*	9'-6" *2,900*	10'-0" *3,050*	10'-6" *3,200*	11'-0" *3,350*	11'-6" *3,500*	12'-0" *3,660*
SINGLE	22	STRESS	178 *8,523*	114 *5,458*	94 *4,501*	79 *3,783*	67 *3,208*	58 *2,777*	51 *2,442*	44 *2,107*	39 *1,867*	35 *1,676*	31 *1,484*	28 *1,341*				
		L/240	✦✦✦	92 *4,405*	69 *3,304*	53 *2,538*	42 *2,011*	34 *1,628*	27 *1,293*	22 *1,053*	19 *910*	16 *766*	13 *622*	11 *527*				
	20	STRESS	223 *10,677*	143 *6,847*	118 *5,650*	99 *4,740*	85 *4,070*	73 *3,495*	64 *3,064*	56 *2,681*	49 *2,346*	44 *2,107*	40 *1,915*	36 *1,724*	32 *1,532*	30 *1,436*	27 *1,293*	25 *1,197*
		L/240	222 *10,629*	113 *5,410*	85 *4,070*	66 *3,160*	52 *2,490*	41 *1,963*	34 *1,628*	28 *1,341*	23 *1,101*	19 *910*	17 *814*	14 *670*	12 *575*	11 *527*	9 *431*	8 *383*
	18	STRESS	300 *14,364*	196 *9,385*	162 *7,757*	136 *6,512*	116 *5,554*	100 *4,788*	87 *4,166*	76 *3,639*	68 *3,256*	60 *2,873*	54 *2,586*	49 *2,346*	44 *2,107*	40 *1,915*	37 *1,772*	34 *1,628*
		L/240	✦✦✦	159 *7,613*	119 *5,698*	92 *4,405*	72 *3,447*	58 *2,777*	47 *2,250*	39 *1,867*	32 *1,532*	27 *1,293*	23 *1,101*	20 *958*	17 *814*	15 *718*	13 *622*	11 *527*
	16	STRESS	300 *14,364*	250 *11,970*	207 *9,911*	174 *8,331*	148 *7,086*	127 *6,081*	111 *5,315*	98 *4,692*	86 *4,118*	77 *3,687*	69 *3,304*	62 *2,969*	57 *2,729*	52 *2,490*	47 *2,250*	43 *2,059*
		L/240	—	198 *9,480*	149 *7,134*	115 *5,506*	90 *4,309*	72 *3,447*	59 *2,825*	48 *2,298*	40 *1,915*	34 *1,628*	29 *1,389*	25 *1,197*	21 *1,005*	19 *910*	16 *766*	14 *670*
DOUBLE	22	STRESS	188 *9,001*	120 *5,746*	99 *4,740*	84 *4,022*	71 *3,399*	61 *2,921*	54 *2,586*	47 *2,250*	42 *2,011*	37 *1,772*	33 *1,580*	30 *1,436*				
		L/240	✦✦✦	✦✦✦	✦✦✦	✦✦✦	✦✦✦	✦✦✦	✦✦✦	✦✦✦	✦✦✦	✦✦✦	32 *1,532*	28 *1,341*				
	20	STRESS	236 *11,300*	151 *7,230*	125 *5,985*	105 *5,027*	89 *4,261*	77 *3,687*	67 *3,208*	59 *2,825*	52 *2,490*	47 *2,250*	42 *2,011*	38 *1,819*	34 *1,628*	31 *1,484*	29 *1,389*	26 *1,245*
		L/240	✦✦✦	✦✦✦	✦✦✦	✦✦✦	✦✦✦	✦✦✦	✦✦✦	✦✦✦	✦✦✦	47 *2,250*	40 *1,915*	34 *1,628*	29 *1,389*	26 *1,245*	22 *1,053*	20 *958*
	18	STRESS	300 *14,364*	204 *9,768*	168 *8,044*	141 *6,751*	121 *5,794*	104 *4,980*	91 *4,357*	80 *3,830*	70 *3,352*	63 *3,016*	56 *2,681*	51 *2,442*	46 *2,202*	42 *2,011*	39 *1,867*	35 *1,676*
		L/240	✦✦✦	✦✦✦	✦✦✦	✦✦✦	✦✦✦	✦✦✦	✦✦✦	✦✦✦	✦✦✦	✦✦✦	56 *2,681*	48 *2,298*	41 *1,963*	36 *1,724*	31 *1,484*	28 *1,341*
	16	STRESS	300 *14,364*	254 *12,162*	210 *10,055*	176 *8,427*	150 *7,182*	129 *6,177*	113 *5,410*	99 *4,740*	88 *4,213*	78 *3,735*	70 *3,352*	63 *3,016*	57 *2,729*	52 *2,490*	48 *2,298*	44 *2,107*
		L/240	✦✦✦	✦✦✦	✦✦✦	✦✦✦	✦✦✦	✦✦✦	✦✦✦	✦✦✦	✦✦✦	✦✦✦	70 *3,352*	60 *2,873*	51 *2,442*	45 *2,155*	39 *1,867*	34 *1,628*
TRIPLE	22	STRESS	235 *11,252*	150 *7,182*	124 *5,937*	105 *5,027*	89 *4,261*	77 *3,687*	67 *3,208*	59 *2,825*	52 *2,490*	46 *2,202*	42 *2,011*	38 *1,819*				
		L/240	✦✦✦	✦✦✦	✦✦✦	100 *4,788*	79 *3,783*	63 *3,016*	51 *2,442*	42 *2,011*	35 *1,676*	30 *1,436*	25 *1,197*	22 *1,053*				
	20	STRESS	295 *14,125*	188 *9,001*	156 *7,469*	131 *6,272*	112 *5,363*	96 *4,597*	84 *4,022*	74 *3,543*	65 *3,112*	58 *2,777*	52 *2,490*	47 *2,250*	43 *2,059*	39 *1,867*	36 *1,724*	33 *1,580*
		L/240	✦✦✦	✦✦✦	✦✦✦	124 *5,937*	97 *4,644*	78 *3,735*	63 *3,016*	52 *2,490*	44 *2,107*	37 *1,772*	31 *1,484*	27 *1,293*	23 *1,101*	20 *958*	18 *862*	15 *718*
	18	STRESS	300 *14,364*	255 *12,209*	210 *10,055*	177 *8,475*	151 *7,230*	130 *6,224*	113 *5,410*	99 *4,740*	88 *4,213*	79 *3,783*	71 *3,399*	64 *3,064*	58 *2,777*	53 *2,538*	48 *2,298*	44 *2,107*
		L/240	✦✦✦	✦✦✦	✦✦✦	173 *8,283*	136 *6,512*	109 *5,219*	89 *4,261*	73 *3,495*	61 *2,921*	51 *2,442*	44 *2,107*	37 *1,772*	32 *1,532*	28 *1,341*	25 *1,197*	22 *1,053*
	16	STRESS	300 *14,364*	300 *14,364*	262 *12,545*	220 *10,534*	188 *9,001*	162 *7,757*	141 *6,751*	124 *5,937*	110 *5,267*	98 *4,692*	88 *4,213*	79 *3,783*	72 *3,447*	65 *3,112*	60 *2,873*	55 *2,633*
		L/240	✦✦✦	✦✦✦	✦✦✦	216 *10,342*	170 *8,140*	136 *6,512*	111 *5,315*	91 *4,357*	76 *3,639*	64 *3,064*	54 *2,586*	47 *2,250*	40 *1,915*	35 *1,676*	31 *1,484*	27 *1,293*

Type PLN™-24/N-24

- **3" (*76 mm*) Deep Roof Deck**
- **Primer Painted or Galvanized**

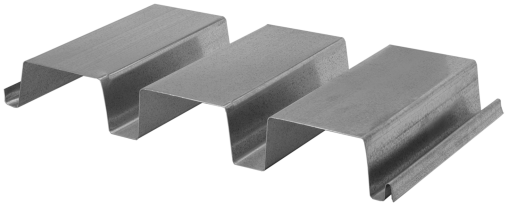

VERTICAL LOADS

Dimensions

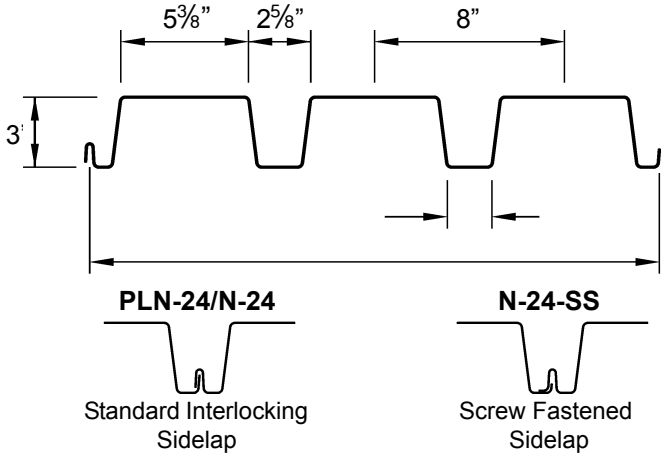

Deck Weight and Section Properties

Gage	Weight (psf, *N/m²*) Galv G60 *Z180*	Weight (psf, *N/m²*) Painted	Properties per ft (*m*) of Width: I in.⁴ *mm⁴*	+S in.³ *mm³*	–S in.³ *mm³*	Allowable Reactions per ft (*m*) of Width (lb, *N*) End Bearing 2" *51 mm*	End Bearing 3" *76 mm*	End Bearing 4" *102 mm*	Interior Bearing 4" *102 mm*	Interior Bearing 5" *127 mm*
22	2.2 *105.3*	2.1 *100.5*	0.655 *894,460*	0.394 *21,183*	0.454 *24,408*	349 *5,093*	419 *6,115*	489 *7,136*	1104 *16,112*	1287 *18,782*
20	2.6 *124.5*	2.5 *119.7*	0.837 *1,142,997*	0.508 *27,312*	0.562 *30,215*	486 *7,093*	572 *8,348*	659 *9,617*	1582 *23,088*	1828 *26,678*
18	3.5 *167.6*	3.4 *162.8*	1.223 *1,670,114*	0.731 *39,301*	0.776 *41,720*	916 *13,368*	1051 *15,338*	1186 *17,308*	2695 *39,331*	3066 *44,745*
16	4.2 *201.1*	4.1 *196.3*	1.647 *2,249,123*	0.950 *51,075*	1.005 *54,032*	1670 *24,372*	1879 *27,422*	2088 *30,472*	4033 *58,857*	4532 *66,140*

Note: Bending strength limited to 20,000 psi (*137,895 kPa*).

Attachment Patterns to Supports

24/4

Metric Conversions	
1⅞"	*48 mm*
2⅝"	*67 mm*
3"	*76 mm*
5⅜"	*137 mm*
8"	*203 mm*
24"	*610 mm*

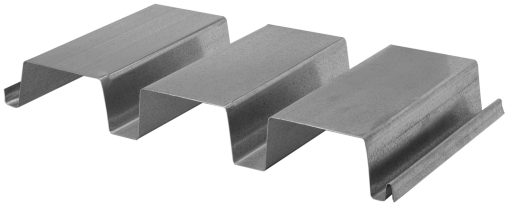

Type PLN™-24/N-24

3" (*76 mm*) Deep Roof Deck
Primer Painted or Galvanized

ALLOWABLE UNIFORM LOADS (psf, *N/m²*)

SPAN GAGE			SPAN (ft-in., *mm*)															
			6'-0" *1,830*	7'-0" *2,130*	7'-6" *2,290*	8'-0" *2,440*	8'-6" *2,590*	9'-0" *2,740*	9'-6" *2,900*	10'-0" *3,050*	10'-6" *3,200*	11'-0" *3,350*	11'-6" *3,500*	12'-0" *3,660*	13'-0" *3,960*	14'-0" *4,270*	15'-0" *4,570*	16'-0" *4,880*
SINGLE	22	STRESS	146 *6,991*	107 *5,123*	93 *4,453*	82 *3,926*	73 *3,495*	65 *3,112*	58 *2,777*	53 *2,538*	48 *2,298*	43 *2,059*	40 *1,915*	36 *1,724*	31 *1,484*	27 *1,293*	23 *1,101*	21 *1,005*
		L/240	✦✦✦	✦✦✦	✦✦✦	✦✦✦	70 *3,352*	59 *2,825*	50 *2,394*	43 *2,059*	37 *1,772*	32 *1,532*	28 *1,341*	25 *1,197*	20 *958*	16 *766*	13 *622*	10 *479*
	20	STRESS	188 *9,001*	138 *6,607*	120 *5,746*	106 *5,075*	94 *4,501*	84 *4,022*	75 *3,591*	68 *3,256*	61 *2,921*	56 *2,681*	51 *2,442*	47 *2,250*	40 *1,915*	35 *1,676*	30 *1,436*	26 *1,245*
		L/240	✦✦✦	✦✦✦	✦✦✦	✦✦✦	89 *4,261*	75 *3,591*	64 *3,064*	55 *2,633*	47 *2,250*	41 *1,963*	36 *1,724*	32 *1,532*	25 *1,197*	20 *958*	16 *766*	13 *622*
	18	STRESS	271 *12,976*	199 *9,528*	173 *8,283*	152 *7,278*	135 *6,464*	120 *5,746*	108 *5,171*	97 *4,644*	88 *4,213*	81 *3,878*	74 *3,543*	68 *3,256*	58 *2,777*	50 *2,394*	43 *2,059*	38 *1,819*
		L/240	✦✦✦	✦✦✦	✦✦✦	✦✦✦	131 *6,272*	110 *5,267*	94 *4,501*	80 *3,830*	69 *3,304*	60 *2,873*	53 *2,538*	46 *2,202*	37 *1,772*	29 *1,389*	24 *1,149*	20 *958*
	16	STRESS	300 *14,364*	259 *12,401*	225 *10,773*	198 *9,480*	175 *8,379*	156 *7,469*	140 *6,703*	127 *6,081*	115 *5,506*	105 *5,027*	96 *4,597*	88 *4,213*	75 *3,591*	65 *3,112*	56 *2,681*	49 *2,346*
		L/240	✦✦✦	✦✦✦	✦✦✦	✦✦✦	✦✦✦	148 *7,086*	126 *6,033*	108 *5,171*	93 *4,453*	81 *3,878*	71 *3,399*	63 *3,016*	49 *2,346*	39 *1,867*	32 *1,532*	26 *1,245*
DOUBLE	22	STRESS	168 *8,044*	124 *5,937*	108 *5,171*	95 *4,549*	84 *4,022*	75 *3,591*	67 *3,208*	61 *2,921*	55 *2,633*	50 *2,394*	46 *2,202*	42 *2,011*	36 *1,724*	31 *1,484*	27 *1,293*	24 *1,149*
		L/240	✦✦✦	✦✦✦	✦✦✦	✦✦✦	✦✦✦	✦✦✦	✦✦✦	✦✦✦	✦✦✦	✦✦✦	✦✦✦	✦✦✦	✦✦✦	✦✦✦	✦✦✦	✦✦✦
	20	STRESS	208 *9,959*	153 *7,326*	133 *6,368*	117 *5,602*	104 *4,980*	93 *4,453*	83 *3,974*	75 *3,591*	68 *3,256*	62 *2,969*	57 *2,729*	52 *2,490*	44 *2,107*	38 *1,819*	33 *1,580*	29 *1,389*
		L/240	✦✦✦	✦✦✦	✦✦✦	✦✦✦	✦✦✦	✦✦✦	✦✦✦	✦✦✦	✦✦✦	✦✦✦	✦✦✦	✦✦✦	✦✦✦	✦✦✦	✦✦✦	✦✦✦
	18	STRESS	287 *13,742*	211 *10,103*	184 *8,810*	162 *7,757*	143 *6,847*	128 *6,129*	115 *5,506*	103 *4,932*	94 *4,501*	86 *4,118*	78 *3,735*	72 *3,447*	61 *2,921*	53 *2,538*	46 *2,202*	40 *1,915*
		L/240	✦✦✦	✦✦✦	✦✦✦	✦✦✦	✦✦✦	✦✦✦	✦✦✦	✦✦✦	✦✦✦	✦✦✦	✦✦✦	✦✦✦	✦✦✦	✦✦✦	✦✦✦	✦✦✦
	16	STRESS	300 *14,364*	273 *13,071*	238 *11,396*	209 *10,007*	185 *8,858*	165 *7,900*	148 *7,086*	134 *6,416*	122 *5,841*	111 *5,315*	101 *4,836*	93 *4,453*	79 *3,783*	68 *3,256*	60 *2,873*	52 *2,490*
		L/240	✦✦✦	✦✦✦	✦✦✦	✦✦✦	✦✦✦	✦✦✦	✦✦✦	✦✦✦	✦✦✦	✦✦✦	✦✦✦	✦✦✦	✦✦✦	✦✦✦	✦✦✦	✦✦✦
TRIPLE	22	STRESS	210 *10,055*	154 *7,374*	135 *6,464*	118 *5,650*	105 *5,027*	93 *4,453*	84 *4,022*	76 *3,639*	69 *3,304*	63 *3,016*	57 *2,729*	53 *2,538*	45 *2,155*	39 *1,867*	34 *1,628*	30 *1,436*
		L/240	✦✦✦	✦✦✦	✦✦✦	✦✦✦	✦✦✦	✦✦✦	✦✦✦	✦✦✦	✦✦✦	61 *2,921*	53 *2,538*	47 *2,250*	37 *1,772*	30 *1,436*	24 *1,149*	20 *958*
	20	STRESS	260 *12,449*	191 *9,145*	167 *7,996*	146 *6,991*	130 *6,224*	116 *5,554*	104 *4,980*	94 *4,501*	85 *4,070*	77 *3,687*	71 *3,399*	65 *3,112*	55 *2,633*	48 *2,298*	42 *2,011*	37 *1,772*
		L/240	✦✦✦	✦✦✦	✦✦✦	✦✦✦	✦✦✦	✦✦✦	✦✦✦	✦✦✦	✦✦✦	✦✦✦	68 *3,256*	60 *2,873*	47 *2,250*	38 *1,819*	31 *1,484*	25 *1,197*
	18	STRESS	300 *14,364*	264 *12,640*	230 *11,012*	202 *9,672*	179 *8,571*	160 *7,661*	143 *6,847*	129 *6,177*	117 *5,602*	107 *5,123*	98 *4,692*	90 *4,309*	77 *3,687*	66 *3,160*	57 *2,729*	51 *2,442*
		L/240	✦✦✦	✦✦✦	✦✦✦	✦✦✦	✦✦✦	✦✦✦	✦✦✦	✦✦✦	✦✦✦	✦✦✦	✦✦✦	88 *4,213*	69 *3,304*	55 *2,633*	45 *2,155*	37 *1,772*
	16	STRESS	300 *14,364*	300 *14,364*	298 *14,268*	262 *12,545*	232 *11,108*	207 *9,911*	186 *8,906*	168 *8,044*	152 *7,278*	138 *6,607*	127 *6,081*	116 *5,554*	99 *4,740*	85 *4,070*	74 *3,543*	65 *3,112*
		L/240	✦✦✦	✦✦✦	✦✦✦	✦✦✦	✦✦✦	✦✦✦	✦✦✦	✦✦✦	✦✦✦	✦✦✦	✦✦✦	✦✦✦	93 *4,453*	74 *3,543*	60 *2,873*	50 *2,394*

Type PLB™-36

- **7 Pneutek® Fastener Pattern at Supports**
  K66 at Supports 0.281" (*7.1 mm*) thick and thicker
  K64 at Supports 0.187-0.312" (*4.7-7.9 mm*) thick
- **Sidelaps Connected with PunchLok® Tool**
- **Primer Painted or Galvanized**

Allowable Diaphragm Shear Values, q (plf, *kN/m*) and Flexibility Factors, F ((in./lb)x10^6, (*mm/N*)*x10^6*)

GAGE	SIDELAP ATTACH-MENT		SPAN (ft-in., *mm*) 4'-0" *1,220*	5'-0" *1,520*	6'-0" *1,830*	7'-0" *2,130*	8'-0" *2,440*	9'-0" *2,740*	10'-0" *3,050*	11'-0" *3,350*	12'-0" *3,660*
22	VSC @ 24"	q	823 *12.01*	781 *11.40*	678 *9.89*	653 *9.53*	592 *8.64*	582 *8.49*	540 *7.88*		
		F	7.6+24R *43.4+137R*	8.5+19R *48.5+108R*	11.2+16R *64.0+91R*	12.1+14R *69.1+80R*	15.1+12R *86.2+69R*	16.0+11R *91.4+63R*	19.4+10R *110.8+57R*		
	VSC @ 18"	q	933 *13.62*	843 *12.30*	733 *10.70*	698 *10.19*	671 *9.79*	617 *9.00*	604 *8.81*		
		F	6.3+24R *36.0+137R*	7.4+19R *42.3+108R*	9.5+16R *54.2+91R*	10.6+14R *60.5+80R*	11.7+12R *66.8+69R*	14.2+11R *81.1+63R*	15.3+10R *87.4+57R*		
	VSC @ 12"	q	1003 *14.64*	897 *13.09*	826 *12.05*	776 *11.32*	738 *10.77*	708 *10.33*	684 *9.98*		
		F	5.6+24R *32.0+137R*	6.6+19R *37.7+108R*	7.6+16R *43.4+91R*	8.7+14R *49.7+80R*	9.8+12R *56.0+69R*	10.9+11R *62.2+63R*	12.0+10R *68.5+57R*		
	VSC @ 8"	q	1121 *16.36*	1033 *15.08*	940 *13.72*	903 *13.18*	850 *12.40*	830 *12.11*	753 *10.99*		
		F	4.9+24R *28.0+137R*	5.4+19R *30.8+108R*	6.3+16R *36.0+91R*	6.8+14R *38.8+80R*	7.8+12R *44.5+69R*	8.3+11R *47.4+63R*	9.3+10R *53.1+57R*		
	VSC @ 6"	q	1220 *17.80*	1110 *16.20*	1036 *15.12*	984 *14.36*	944 *13.78*	913 *13.32*	753 *10.99*		
		F	4.4+24R *25.1+137R*	5.0+19R *28.6+108R*	5.5+16R *31.4+91R*	6.1+14R *34.8+80R*	6.7+12R *38.3+69R*	7.2+11R *41.1+63R*	7.8+10R *44.5+57R*		
	VSC @ 4"	q	1387 *20.24*	1273 *18.58*	1197 *17.47*	1143 *16.68*	1102 *16.08*	929 *13.56*	753 *10.99*		
		F	4.0+24R *22.8+137R*	4.3+19R *24.6+108R*	4.7+16R *26.8+91R*	5.1+14R *29.1+80R*	5.5+12R *31.4+69R*	5.9+11R *33.7+63R*	6.3+10R *36.0+57R*		
20	VSC @ 24"	q	981 *14.32*	1008 *14.71*	810 *11.82*	843 *12.30*	720 *10.51*	751 *10.96*	665 *9.70*	693 *10.11*	627 *9.15*
		F	6.3+13R *36.0+74R*	7.0+10R *40.0+57R*	9.3+8R *53.1+46R*	10.0+7R *57.1+40R*	12.5+6R *71.4+34R*	13.3+6R *75.9+34R*	16.0+5R *91.4+29R*	16.7+5R *95.4+29R*	19.6+4R *111.9+23R*
	VSC @ 18"	q	1203 *17.56*	1088 *15.88*	947 *13.82*	902 *13.16*	867 *12.65*	798 *11.65*	781 *11.40*	767 *11.19*	688 *10.04*
		F	5.3+13R *30.3+74R*	6.1+10R *34.8+57R*	7.9+8R *45.1+46R*	8.8+7R *50.2+40R*	9.7+6R *55.4+34R*	11.7+6R *66.8+34R*	12.7+5R *72.5+29R*	13.6+5R *77.7+29R*	15.8+4R *90.2+23R*
	VSC @ 12"	q	1295 *18.90*	1158 *16.90*	1068 *15.59*	1003 *14.64*	954 *13.92*	916 *13.37*	885 *12.92*	818 *11.94*	688 *10.04*
		F	4.7+13R *26.8+74R*	5.5+10R *31.4+57R*	6.3+8R *36.0+46R*	7.2+7R *41.1+40R*	8.1+6R *46.3+34R*	9.0+6R *51.4+34R*	9.9+5R *56.5+29R*	10.9+5R *62.2+29R*	11.8+4R *67.4+23R*
	VSC @ 8"	q	1447 *21.12*	1335 *19.48*	1215 *17.73*	1168 *17.05*	1099 *16.04*	1075 *15.69*	990 *14.45*	818 *11.94*	688 *10.04*
		F	4.0+13R *22.8+74R*	4.5+10R *25.7+57R*	5.2+8R *29.7+46R*	5.7+7R *32.5+40R*	6.4+6R *36.5+34R*	6.9+6R *39.4+34R*	7.7+5R *44.0+29R*	8.2+5R *46.8+29R*	9.0+4R *51.4+23R*
	VSC @ 6"	q	1576 *23.00*	1435 *20.94*	1340 *19.56*	1272 *18.56*	1222 *17.83*	1182 *17.25*	990 *14.45*	818 *11.94*	688 *10.04*
		F	3.7+13R *21.1+74R*	4.1+10R *23.4+57R*	4.6+8R *26.3+46R*	5.0+7R *28.6+40R*	5.5+6R *31.4+34R*	6.0+6R *34.3+34R*	6.5+5R *37.1+29R*	7.0+5R *40.0+29R*	7.4+4R *42.3+23R*
	VSC @ 4"	q	1793 *26.17*	1647 *24.04*	1549 *22.61*	1479 *21.58*	1427 *20.83*	1223 *17.85*	990 *14.45*	818 *11.94*	688 *10.04*
		F	3.3+13R *18.8+74R*	3.6+10R *20.6+57R*	3.9+8R *22.3+46R*	4.2+7R *24.0+40R*	4.6+6R *26.3+34R*	4.9+6R *28.0+34R*	5.2+5R *29.7+29R*	5.5+5R *31.4+29R*	5.9+4R *33.7+23R*

K66 = Pneutek K66062 or K66075 fasteners
K64 = Pneutek K64062 fastener
VSC = Verco Sidelap Connection

Type PLB™-36

- 7 Pneutek® Fastener Pattern at Supports
  K66 at Supports 0.281" (*7.1 mm*) thick and thicker
  K64 at Supports 0.187-0.312" (*4.7-7.9 mm*) thick
- Sidelaps Connected with PunchLok® Tool
- Primer Painted or Galvanized

Allowable Diaphragm Shear Values, q (plf, *kN/m*) and Flexibility Factors, F ((in./lb)x10^6, (*mm/N*)*x10*^{6})

GAGE	SIDELAP ATTACH-MENT		SPAN (ft-in., *mm*) 4'-0" *1,220*	5'-0" *1,520*	6'-0" *1,830*	7'-0" *2,130*	8'-0" *2,440*	9'-0" *2,740*	10'-0" *3,050*	11'-0" *3,350*	12'-0" *3,660*
18	VSC @ 24"	q	1260 *18.39*	1302 *19.00*	1047 *15.28*	1094 *15.97*	935 *13.65*	978 *14.27*	866 *12.64*	904 *13.19*	819 *11.95*
		F	4.6+5R *26.3+29R*	5.2+4R *29.7+23R*	6.8+3R *38.8+17R*	7.3+3R *41.7+17R*	9.1+2R *52.0+11R*	9.6+2R *54.8+11R*	11.6+2R *66.2+11R*	12.1+2R *69.1+11R*	14.1+2R *80.5+11R*
	VSC @ 18"	q	1678 *24.49*	1523 *22.23*	1311 *19.13*	1267 *18.49*	1221 *17.82*	1124 *16.40*	1102 *16.08*	1084 *15.82*	1023 *14.93*
		F	3.9+5R *22.3+29R*	4.5+4R *25.7+23R*	5.8+3R *33.1+17R*	6.4+3R *36.5+17R*	7.0+2R *40.0+11R*	8.5+2R *48.5+11R*	9.2+2R *52.5+11R*	9.8+2R *56.0+11R*	11.4+2R *65.1+11R*
	VSC @ 12"	q	1809 *26.40*	1624 *23.70*	1500 *21.89*	1412 *20.61*	1346 *19.64*	1294 *18.88*	1253 *18.29*	1219 *17.79*	1057 *15.43*
		F	3.5+5R *20.0+29R*	4.0+4R *22.8+23R*	4.6+3R *26.3+17R*	5.3+3R *30.3+17R*	5.9+2R *33.7+11R*	6.6+2R *37.7+11R*	7.2+2R *41.1+11R*	7.9+2R *45.1+11R*	8.5+2R *48.5+11R*
	VSC @ 8"	q	2029 *29.61*	1878 *27.41*	1713 *25.00*	1650 *24.08*	1555 *22.69*	1523 *22.23*	1460 *21.31*	1257 *18.34*	1057 *15.43*
		F	3.0+5R *17.1+29R*	3.3+4R *18.8+23R*	3.8+3R *21.7+17R*	4.1+3R *23.4+17R*	4.7+2R *26.8+11R*	5.0+2R *28.6+11R*	5.6+2R *32.0+11R*	5.9+2R *33.7+11R*	6.5+2R *37.1+11R*
	VSC @ 6"	q	2215 *32.33*	2022 *29.51*	1893 *27.63*	1801 *26.28*	1731 *25.26*	1678 *24.49*	1521 *22.20*	1257 *18.34*	1057 *15.43*
		F	2.7+5R *15.4+29R*	3.0+4R *17.1+23R*	3.4+3R *19.4+17R*	3.7+3R *21.1+17R*	4.0+2R *22.8+11R*	4.4+2R *25.1+11R*	4.7+2R *26.8+11R*	5.0+2R *28.6+11R*	5.4+2R *30.8+11R*
	VSC @ 4"	q	2526 *36.86*	2327 *33.96*	2194 *32.02*	2099 *30.63*	2027 *29.58*	1878 *27.41*	1521 *22.20*	1257 *18.34*	1057 *15.43*
		F	2.5+5R *14.3+29R*	2.7+4R *15.4+23R*	2.9+3R *16.6+17R*	3.1+3R *17.7+17R*	3.3+2R *18.8+11R*	3.6+2R *20.6+11R*	3.8+2R *21.7+11R*	4.0+2R *22.8+11R*	4.3+2R *24.6+11R*
16	VSC @ 24"	q	1518 *22.15*	1576 *23.00*	1269 *18.52*	1331 *19.42*	1139 *16.62*	1194 *17.43*	1058 *15.44*	1107 *16.16*	1003 *14.64*
		F	3.6+2R *20.6+11R*	4.0+2R *22.8+11R*	5.3+1R *30.3+6R*	5.7+1R *32.5+6R*	7.0+1R *40.0+6R*	7.4+1R *42.3+6R*	8.9+1R *50.8+6R*	9.3+1R *53.1+6R*	10.8+1R *61.7+6R*
	VSC @ 18"	q	2057 *30.02*	1926 *28.11*	1594 *23.26*	1596 *23.29*	1555 *22.69*	1392 *20.31*	1407 *20.53*	1386 *20.23*	1287 *18.78*
		F	3.0+2R *17.1+11R*	3.5+2R *20.0+11R*	4.5+1R *25.7+6R*	4.9+1R *28.0+6R*	5.4+1R *30.8+6R*	6.6+1R *37.7+6R*	7.0+1R *40.0+6R*	7.5+1R *42.8+6R*	8.7+1R *49.7+6R*
	VSC @ 12"	q	2284 *33.33*	2058 *30.03*	1907 *27.83*	1799 *26.25*	1717 *25.06*	1654 *24.14*	1604 *23.41*	1562 *22.80*	1478 *21.57*
		F	2.7+2R *15.4+11R*	3.1+2R *17.7+11R*	3.6+1R *20.6+6R*	4.1+1R *23.4+6R*	4.6+1R *26.3+6R*	5.0+1R *28.6+6R*	5.5+1R *31.4+6R*	6.0+1R *34.3+6R*	6.5+1R *37.1+6R*
	VSC @ 8"	q	2571 *37.52*	2390 *34.88*	2184 *31.87*	2109 *30.78*	1990 *29.04*	1953 *28.50*	1874 *27.35*	1759 *25.67*	1478 *21.57*
		F	2.3+2R *13.1+11R*	2.6+2R *14.8+11R*	3.0+1R *17.1+6R*	3.2+1R *18.3+6R*	3.6+1R *20.6+6R*	3.9+1R *22.3+6R*	4.3+1R *24.6+6R*	4.5+1R *25.7+6R*	5.0+1R *28.6+6R*
	VSC @ 6"	q	2813 *41.05*	2577 *37.61*	2418 *35.29*	2305 *33.64*	2220 *32.40*	2154 *31.44*	2101 *30.66*	1759 *25.67*	1478 *21.57*
		F	2.1+2R *12.0+11R*	2.4+2R *13.7+11R*	2.6+1R *14.8+6R*	2.9+1R *16.6+6R*	3.1+1R *17.7+6R*	3.4+1R *19.4+6R*	3.6+1R *20.6+6R*	3.9+1R *22.3+6R*	4.1+1R *23.4+6R*
	VSC @ 4"	q	3219 *46.98*	2975 *43.42*	2811 *41.02*	2694 *39.32*	2606 *38.03*	2538 *37.04*	2129 *31.07*	1759 *25.67*	1478 *21.57*
		F	1.9+2R *10.8+11R*	2.1+2R *12.0+11R*	2.3+1R *13.1+6R*	2.4+1R *13.7+6R*	2.6+1R *14.8+6R*	2.8+1R *16.0+6R*	2.9+1R *16.6+6R*	3.1+1R *17.7+6R*	3.3+1R *18.8+6R*

K66 = Pneutek K66062 or K66075 fasteners
K64 = Pneutek K64062 fastener
VSC = Verco Sidelap Connection

Type PLB™-36

- **7 Pneutek® Fastener Pattern at Supports SDK63 at Supports 0.155-0.250" (*3.9-6.4 mm*) thick**
- **Sidelaps Connected with PunchLok® Tool**
- **Primer Painted or Galvanized**

Allowable Diaphragm Shear Values, q (plf, *kN/m*) and Flexibility Factors, F ((in./lb)x10^6, (*mm/N*)*x10^6*)

GAGE	SIDELAP ATTACH-MENT		SPAN (ft-in., *mm*) 4'-0" *1,220*	5'-0" *1,520*	6'-0" *1,830*	7'-0" *2,130*	8'-0" *2,440*	9'-0" *2,740*	10'-0" *3,050*	11'-0" *3,350*	12'-0" *3,660*
22	VSC @ 24"	q	782 *11.41*	742 *10.83*	644 *9.40*	621 *9.06*	562 *8.20*	553 *8.07*	513 *7.49*		
		F	7.6+24R *43.4+137R*	8.5+19R *48.5+108R*	11.2+16R *64.0+91R*	12.1+14R *69.1+80R*	15.1+12R *86.2+69R*	16.0+11R *91.4+63R*	19.4+10R *110.8+57R*		
	VSC @ 18"	q	887 *12.94*	801 *11.69*	697 *10.17*	663 *9.68*	637 *9.30*	586 *8.55*	574 *8.38*		
		F	6.3+24R *36.0+137R*	7.4+19R *42.3+108R*	9.5+16R *54.2+91R*	10.6+14R *60.5+80R*	11.7+12R *66.8+69R*	14.2+11R *81.1+63R*	15.3+10R *87.4+57R*		
	VSC @ 12"	q	953 *13.91*	852 *12.43*	785 *11.46*	737 *10.76*	701 *10.23*	673 *9.82*	650 *9.49*		
		F	5.6+24R *32.0+137R*	6.6+19R *37.7+108R*	7.6+16R *43.4+91R*	8.7+14R *49.7+80R*	9.8+12R *56.0+69R*	10.9+11R *62.2+63R*	12.0+10R *68.5+57R*		
	VSC @ 8"	q	1065 *15.54*	982 *14.33*	893 *13.03*	858 *12.52*	807 *11.78*	789 *11.51*	753 *10.99*		
		F	4.9+24R *28.0+137R*	5.4+19R *30.8+108R*	6.3+16R *36.0+91R*	6.8+14R *38.8+80R*	7.8+12R *44.5+69R*	8.3+11R *47.4+63R*	9.3+10R *53.1+57R*		
	VSC @ 6"	q	1159 *16.91*	1055 *15.40*	985 *14.37*	934 *13.63*	897 *13.09*	867 *12.65*	753 *10.99*		
		F	4.4+24R *25.1+137R*	5.0+19R *28.6+108R*	5.5+16R *31.4+91R*	6.1+14R *34.8+80R*	6.7+12R *38.3+69R*	7.2+11R *41.1+63R*	7.8+10R *44.5+57R*		
	VSC @ 4"	q	1318 *19.23*	1210 *17.66*	1138 *16.61*	1086 *15.85*	1047 *15.28*	929 *13.56*	753 *10.99*		
		F	4.0+24R *22.8+137R*	4.3+19R *24.6+108R*	4.7+16R *26.8+91R*	5.1+14R *29.1+80R*	5.5+12R *31.4+69R*	5.9+11R *33.7+63R*	6.3+10R *36.0+57R*		
20	VSC @ 24"	q	932 *13.60*	958 *13.98*	770 *11.24*	801 *11.69*	684 *9.98*	714 *10.42*	632 *9.22*	658 *9.60*	596 *8.70*
		F	6.3+13R *36.0+74R*	7.0+10R *40.0+57R*	9.3+8R *53.1+46R*	10.0+7R *57.1+40R*	12.5+6R *71.4+34R*	13.3+6R *75.9+34R*	16.0+5R *91.4+29R*	16.7+5R *95.4+29R*	19.6+4R *111.9+23R*
	VSC @ 18"	q	1143 *16.68*	1034 *15.09*	899 *13.12*	857 *12.51*	824 *12.03*	758 *11.06*	742 *10.83*	728 *10.62*	687 *10.03*
		F	5.3+13R *30.3+74R*	6.1+10R *34.8+57R*	7.9+8R *45.1+46R*	8.8+7R *50.2+40R*	9.7+6R *55.4+34R*	11.7+6R *66.8+34R*	12.7+5R *72.5+29R*	13.6+5R *77.7+29R*	15.8+4R *90.2+23R*
	VSC @ 12"	q	1230 *17.95*	1101 *16.07*	1014 *14.80*	952 *13.89*	906 *13.22*	870 *12.70*	841 *12.27*	817 *11.92*	688 *10.04*
		F	4.7+13R *26.8+74R*	5.5+10R *31.4+57R*	6.3+8R *36.0+46R*	7.2+7R *41.1+40R*	8.1+6R *46.3+34R*	9.0+6R *51.4+34R*	9.9+5R *56.5+29R*	10.9+5R *62.2+29R*	11.8+4R *67.4+23R*
	VSC @ 8"	q	1375 *20.07*	1268 *18.51*	1155 *16.86*	1109 *16.18*	1044 *15.24*	1021 *14.90*	978 *14.27*	818 *11.94*	688 *10.04*
		F	4.0+13R *22.8+74R*	4.5+10R *25.7+57R*	5.2+8R *29.7+46R*	5.7+7R *32.5+40R*	6.4+6R *36.5+34R*	6.9+6R *39.4+34R*	7.7+5R *44.0+29R*	8.2+5R *46.8+29R*	9.0+4R *51.4+23R*
	VSC @ 6"	q	1498 *21.86*	1363 *19.89*	1273 *18.58*	1209 *17.64*	1160 *16.93*	1123 *16.39*	990 *14.45*	818 *11.94*	688 *10.04*
		F	3.7+13R *21.1+74R*	4.1+10R *23.4+57R*	4.6+8R *26.3+46R*	5.0+7R *28.6+40R*	5.5+6R *31.4+34R*	6.0+6R *34.3+34R*	6.5+5R *37.1+29R*	7.0+5R *40.0+29R*	7.4+4R *42.3+23R*
	VSC @ 4"	q	1703 *24.85*	1564 *22.82*	1472 *21.48*	1405 *20.50*	1356 *19.79*	1223 *17.85*	990 *14.45*	818 *11.94*	688 *10.04*
		F	3.3+13R *18.8+74R*	3.6+10R *20.6+57R*	3.9+8R *22.3+46R*	4.2+7R *24.0+40R*	4.6+6R *26.3+34R*	4.9+6R *28.0+34R*	5.2+5R *29.7+29R*	5.5+5R *31.4+29R*	5.9+4R *33.7+23R*

SDK63 = Pneutek SDK63075 fastener
VSC = Verco Sidelap Connection

Type PLB™-36

- 7 Pneutek® Fastener Pattern at Supports
- SDK63 at Supports 0.155-0.250" (*3.9-6.4 mm*) thick
- Sidelaps Connected with PunchLok® Tool
- Primer Painted or Galvanized

Allowable Diaphragm Shear Values, q (plf, *kN/m*) and Flexibility Factors, F ((in./lb)x10^6, (*mm/N*)*x10*^{6})

GAGE	SIDELAP ATTACH-MENT		SPAN (ft-in., *mm*) 4'-0" *1,220*	5'-0" *1,520*	6'-0" *1,830*	7'-0" *2,130*	8'-0" *2,440*	9'-0" *2,740*	10'-0" *3,050*	11'-0" *3,350*	12'-0" *3,660*
18	VSC @ 24"	q	1197 *17.47*	1237 *18.05*	995 *14.52*	1039 *15.16*	888 *12.96*	929 *13.56*	822 *12.00*	859 *12.54*	778 *11.35*
		F	4.6+5R *26.3+29R*	5.2+4R *29.7+23R*	6.8+3R *38.8+17R*	7.3+3R *41.7+17R*	9.1+2R *52.0+11R*	9.6+2R *54.8+11R*	11.6+2R *66.2+11R*	12.1+2R *69.1+11R*	14.1+2R *80.5+11R*
	VSC @ 18"	q	1594 *23.26*	1446 *21.10*	1246 *18.18*	1203 *17.56*	1160 *16.93*	1068 *15.59*	1047 *15.28*	1030 *15.03*	972 *14.19*
		F	3.9+5R *22.3+29R*	4.5+4R *25.7+23R*	5.8+3R *33.1+17R*	6.4+3R *36.5+17R*	7.0+2R *40.0+11R*	8.5+2R *48.5+11R*	9.2+2R *52.5+11R*	9.8+2R *56.0+11R*	11.4+2R *65.1+11R*
	VSC @ 12"	q	1718 *25.07*	1543 *22.52*	1425 *20.80*	1341 *19.57*	1278 *18.65*	1229 *17.94*	1190 *17.37*	1158 *16.90*	1057 *15.43*
		F	3.5+5R *20.0+29R*	4.0+4R *22.8+23R*	4.6+3R *26.3+17R*	5.3+3R *30.3+17R*	5.9+2R *33.7+11R*	6.6+2R *37.7+11R*	7.2+2R *41.1+11R*	7.9+2R *45.1+11R*	8.5+2R *48.5+11R*
	VSC @ 8"	q	1928 *28.14*	1784 *26.04*	1628 *23.76*	1567 *22.87*	1477 *21.56*	1447 *21.12*	1387 *20.24*	1257 *18.34*	1057 *15.43*
		F	3.0+5R *17.1+29R*	3.3+4R *18.8+23R*	3.8+3R *21.7+17R*	4.1+3R *23.4+17R*	4.7+2R *26.8+11R*	5.0+2R *28.6+11R*	5.6+2R *32.0+11R*	5.9+2R *33.7+11R*	6.5+2R *37.1+11R*
	VSC @ 6"	q	2104 *30.71*	1921 *28.03*	1798 *26.24*	1711 *24.97*	1645 *24.01*	1594 *23.26*	1521 *22.20*	1257 *18.34*	1057 *15.43*
		F	2.7+5R *15.4+29R*	3.0+4R *17.1+23R*	3.4+3R *19.4+17R*	3.7+3R *21.1+17R*	4.0+2R *22.8+11R*	4.4+2R *25.1+11R*	4.7+2R *26.8+11R*	5.0+2R *28.6+11R*	5.4+2R *30.8+11R*
	VSC @ 4"	q	2400 *35.03*	2211 *32.27*	2084 *30.41*	1994 *29.10*	1926 *28.11*	1873 *27.33*	1521 *22.20*	1257 *18.34*	1057 *15.43*
		F	2.5+5R *14.3+29R*	2.7+4R *15.4+23R*	2.9+3R *16.6+17R*	3.1+3R *17.7+17R*	3.3+2R *18.8+11R*	3.6+2R *20.6+11R*	3.8+2R *21.7+11R*	4.0+2R *22.8+11R*	4.3+2R *24.6+11R*
16	VSC @ 24"	q	1442 *21.04*	1498 *21.86*	1206 *17.60*	1264 *18.45*	1082 *15.79*	1134 *16.55*	1005 *14.67*	1052 *15.35*	953 *13.91*
		F	3.6+2R *20.6+11R*	4.0+2R *22.8+11R*	5.3+1R *30.3+6R*	5.7+1R *32.5+6R*	7.0+1R *40.0+6R*	7.4+1R *42.3+6R*	8.9+1R *50.8+6R*	9.3+1R *53.1+6R*	10.8+1R *61.7+6R*
	VSC @ 18"	q	1954 *28.52*	1829 *26.69*	1514 *22.10*	1516 *22.12*	1477 *21.56*	1322 *19.29*	1337 *19.51*	1317 *19.22*	1222 *17.83*
		F	3.0+2R *17.1+11R*	3.5+2R *20.0+11R*	4.5+1R *25.7+6R*	4.9+1R *28.0+6R*	5.4+1R *30.8+6R*	6.6+1R *37.7+6R*	7.0+1R *40.0+6R*	7.5+1R *42.8+6R*	8.7+1R *49.7+6R*
	VSC @ 12"	q	2170 *31.67*	1955 *28.53*	1811 *26.43*	1709 *24.94*	1632 *23.82*	1572 *22.94*	1523 *22.23*	1484 *21.66*	1451 *21.18*
		F	2.7+2R *15.4+11R*	3.1+2R *17.7+11R*	3.6+1R *20.6+6R*	4.1+1R *23.4+6R*	4.6+1R *26.3+6R*	5.0+1R *28.6+6R*	5.5+1R *31.4+6R*	6.0+1R *34.3+6R*	6.5+1R *37.1+6R*
	VSC @ 8"	q	2443 *35.65*	2270 *33.13*	2075 *30.28*	2003 *29.23*	1891 *27.60*	1855 *27.07*	1780 *25.98*	1759 *25.67*	1478 *21.57*
		F	2.3+2R *13.1+11R*	2.6+2R *14.8+11R*	3.0+1R *17.1+6R*	3.2+1R *18.3+6R*	3.6+1R *20.6+6R*	3.9+1R *22.3+6R*	4.3+1R *24.6+6R*	4.5+1R *25.7+6R*	5.0+1R *28.6+6R*
	VSC @ 6"	q	2673 *39.01*	2448 *35.73*	2297 *33.52*	2190 *31.96*	2109 *30.78*	2046 *29.86*	1996 *29.13*	1759 *25.67*	1478 *21.57*
		F	2.1+2R *12.0+11R*	2.4+2R *13.7+11R*	2.6+1R *14.8+6R*	2.9+1R *16.6+6R*	3.1+1R *17.7+6R*	3.4+1R *19.4+6R*	3.6+1R *20.6+6R*	3.9+1R *22.3+6R*	4.1+1R *23.4+6R*
	VSC @ 4"	q	3058 *44.63*	2826 *41.24*	2670 *38.97*	2559 *37.35*	2476 *36.13*	2411 *35.19*	2129 *31.07*	1759 *25.67*	1478 *21.57*
		F	1.9+2R *10.8+11R*	2.1+2R *12.0+11R*	2.3+1R *13.1+6R*	2.4+1R *13.7+6R*	2.6+1R *14.8+6R*	2.8+1R *16.0+6R*	2.9+1R *16.6+6R*	3.1+1R *17.7+6R*	3.3+1R *18.8+6R*

SDK63 = Pneutek SDK63075 fastener
VSC = Verco Sidelap Connection

Type PLB™-36

- **7 Pneutek® Fastener Pattern at Supports SDK61 at Supports 0.113-0.155" (*2.9-3.9 mm*) thick**
- **Sidelaps Connected with PunchLok® Tool**
- **Primer Painted or Galvanized**

Allowable Diaphragm Shear Values, q (plf, *kN/m*) and Flexibility Factors, F ((in./lb)x10^6, (*mm/N*)*x10^6*)

GAGE	SIDELAP ATTACH-MENT		SPAN (ft-in., *mm*) 4'-0" *1,220*	5'-0" *1,520*	6'-0" *1,830*	7'-0" *2,130*	8'-0" *2,440*	9'-0" *2,740*	10'-0" *3,050*	11'-0" *3,350*	12'-0" *3,660*
22	VSC @ 24"	q	535 *7.81*	508 *7.41*	441 *6.44*	425 *6.20*	385 *5.62*	378 *5.52*	351 *5.12*		
		F	7.6+24R *43.4+137R*	8.5+19R *48.5+108R*	11.2+16R *64.0+91R*	12.1+14R *69.1+80R*	15.1+12R *86.2+69R*	16.0+11R *91.4+63R*	19.4+10R *110.8+57R*		
	VSC @ 18"	q	607 *8.86*	548 *8.00*	477 *6.96*	454 *6.63*	436 *6.36*	401 *5.85*	393 *5.74*		
		F	6.3+24R *36.0+137R*	7.4+19R *42.3+108R*	9.5+16R *54.2+91R*	10.6+14R *60.5+80R*	11.7+12R *66.8+69R*	14.2+11R *81.1+63R*	15.3+10R *87.4+57R*		
	VSC @ 12"	q	652 *9.52*	583 *8.51*	537 *7.84*	504 *7.36*	480 *7.01*	460 *6.71*	445 *6.49*		
		F	5.6+24R *32.0+137R*	6.6+19R *37.7+108R*	7.6+16R *43.4+91R*	8.7+14R *49.7+80R*	9.8+12R *56.0+69R*	10.9+11R *62.2+63R*	12.0+10R *68.5+57R*		
	VSC @ 8"	q	729 *10.64*	672 *9.81*	611 *8.92*	587 *8.57*	552 *8.06*	540 *7.88*	517 *7.55*		
		F	4.9+24R *28.0+137R*	5.4+19R *30.8+108R*	6.3+16R *36.0+91R*	6.8+14R *38.8+80R*	7.8+12R *44.5+69R*	8.3+11R *47.4+63R*	9.3+10R *53.1+57R*		
	VSC @ 6"	q	793 *11.57*	722 *10.54*	674 *9.84*	639 *9.33*	614 *8.96*	594 *8.67*	577 *8.42*		
		F	4.4+24R *25.1+137R*	5.0+19R *28.6+108R*	5.5+16R *31.4+91R*	6.1+14R *34.8+80R*	6.7+12R *38.3+69R*	7.2+11R *41.1+63R*	7.8+10R *44.5+57R*		
	VSC @ 4"	q	901 *13.15*	828 *12.08*	778 *11.35*	743 *10.84*	716 *10.45*	696 *10.16*	679 *9.91*		
		F	4.0+24R *22.8+137R*	4.3+19R *24.6+108R*	4.7+16R *26.8+91R*	5.1+14R *29.1+80R*	5.5+12R *31.4+69R*	5.9+11R *33.7+63R*	6.3+10R *36.0+57R*		
20	VSC @ 24"	q	638 *9.31*	655 *9.56*	527 *7.69*	548 *8.00*	468 *6.83*	488 *7.12*	432 *6.30*	451 *6.58*	408 *5.95*
		F	6.3+13R *36.0+74R*	7.0+10R *40.0+57R*	9.3+8R *53.1+46R*	10.0+7R *57.1+40R*	12.5+6R *71.4+34R*	13.3+6R *75.9+34R*	16.0+5R *91.4+29R*	16.7+5R *95.4+29R*	19.6+4R *111.9+23R*
	VSC @ 18"	q	782 *11.41*	707 *10.32*	615 *8.98*	586 *8.55*	564 *8.23*	519 *7.57*	508 *7.41*	498 *7.27*	470 *6.86*
		F	5.3+13R *30.3+74R*	6.1+10R *34.8+57R*	7.9+8R *45.1+46R*	8.8+7R *50.2+40R*	9.7+6R *55.4+34R*	11.7+6R *66.8+34R*	12.7+5R *72.5+29R*	13.6+5R *77.7+29R*	15.8+4R *90.2+23R*
	VSC @ 12"	q	841 *12.27*	753 *10.99*	694 *10.13*	652 *9.52*	620 *9.05*	595 *8.68*	575 *8.39*	559 *8.16*	546 *7.97*
		F	4.7+13R *26.8+74R*	5.5+10R *31.4+57R*	6.3+8R *36.0+46R*	7.2+7R *41.1+40R*	8.1+6R *46.3+34R*	9.0+6R *51.4+34R*	9.9+5R *56.5+29R*	10.9+5R *62.2+29R*	11.8+4R *67.4+23R*
	VSC @ 8"	q	941 *13.73*	868 *12.67*	790 *11.53*	759 *11.08*	714 *10.42*	699 *10.20*	669 *9.76*	660 *9.63*	639 *9.33*
		F	4.0+13R *22.8+74R*	4.5+10R *25.7+57R*	5.2+8R *29.7+46R*	5.7+7R *32.5+40R*	6.4+6R *36.5+34R*	6.9+6R *39.4+34R*	7.7+5R *44.0+29R*	8.2+5R *46.8+29R*	9.0+4R *51.4+23R*
	VSC @ 6"	q	1025 *14.96*	933 *13.62*	871 *12.71*	827 *12.07*	794 *11.59*	768 *11.21*	748 *10.92*	731 *10.67*	688 *10.04*
		F	3.7+13R *21.1+74R*	4.1+10R *23.4+57R*	4.6+8R *26.3+46R*	5.0+7R *28.6+40R*	5.5+6R *31.4+34R*	6.0+6R *34.3+34R*	6.5+5R *37.1+29R*	7.0+5R *40.0+29R*	7.4+4R *42.3+23R*
	VSC @ 4"	q	1165 *17.00*	1070 *15.62*	1007 *14.70*	962 *14.04*	928 *13.54*	901 *13.15*	880 *12.84*	818 *11.94*	688 *10.04*
		F	3.3+13R *18.8+74R*	3.6+10R *20.6+57R*	3.9+8R *22.3+46R*	4.2+7R *24.0+40R*	4.6+6R *26.3+34R*	4.9+6R *28.0+34R*	5.2+5R *29.7+29R*	5.5+5R *31.4+29R*	5.9+4R *33.7+23R*

SDK61 = Pneutek SDK61075 fastener
VSC = Verco Sidelap Connection

Type PLB™-36

- **7 Pneutek® Fastener Pattern at Supports**
  SDK61 at Supports 0.113-0.155" (*2.9-3.9 mm*) thick
- **Sidelaps Connected with PunchLok® Tool**
- **Primer Painted or Galvanized**

Allowable Diaphragm Shear Values, q (plf, *kN/m*) and Flexibility Factors, F ((in./lb)x10^6, (*mm/N*)*x10*^{6})

GAGE	SIDELAP ATTACH-MENT		SPAN (ft-in., *mm*) 4'-0" *1,220*	5'-0" *1,520*	6'-0" *1,830*	7'-0" *2,130*	8'-0" *2,440*	9'-0" *2,740*	10'-0" *3,050*	11'-0" *3,350*	12'-0" *3,660*
18	VSC @ 24"	q	819 *11.95*	846 *12.35*	680 *9.92*	711 *10.38*	608 *8.87*	636 *9.28*	563 *8.22*	588 *8.58*	532 *7.76*
		F	4.6+5R *26.3+29R*	5.2+4R *29.7+23R*	6.8+3R *38.8+17R*	7.3+3R *41.7+17R*	9.1+2R *52.0+11R*	9.6+2R *54.8+11R*	11.6+2R *66.2+11R*	12.1+2R *69.1+11R*	14.1+2R *80.5+11R*
	VSC @ 18"	q	1090 *15.91*	990 *14.45*	852 *12.43*	823 *12.01*	794 *11.59*	731 *10.67*	717 *10.46*	705 *10.29*	665 *9.70*
		F	3.9+5R *22.3+29R*	4.5+4R *25.7+23R*	5.8+3R *33.1+17R*	6.4+3R *36.5+17R*	7.0+2R *40.0+11R*	8.5+2R *48.5+11R*	9.2+2R *52.5+11R*	9.8+2R *56.0+11R*	11.4+2R *65.1+11R*
	VSC @ 12"	q	1176 *17.16*	1056 *15.41*	975 *14.23*	918 *13.40*	875 *12.77*	841 *12.27*	814 *11.88*	792 *11.56*	774 *11.30*
		F	3.5+5R *20.0+29R*	4.0+4R *22.8+23R*	4.6+3R *26.3+17R*	5.3+3R *30.3+17R*	5.9+2R *33.7+11R*	6.6+2R *37.7+11R*	7.2+2R *41.1+11R*	7.9+2R *45.1+11R*	8.5+2R *48.5+11R*
	VSC @ 8"	q	1319 *19.25*	1221 *17.82*	1114 *16.26*	1072 *15.64*	1011 *14.75*	990 *14.45*	949 *13.85*	937 *13.67*	908 *13.25*
		F	3.0+5R *17.1+29R*	3.3+4R *18.8+23R*	3.8+3R *21.7+17R*	4.1+3R *23.4+17R*	4.7+2R *26.8+11R*	5.0+2R *28.6+11R*	5.6+2R *32.0+11R*	5.9+2R *33.7+11R*	6.5+2R *37.1+11R*
	VSC @ 6"	q	1440 *21.02*	1314 *19.18*	1230 *17.95*	1170 *17.07*	1125 *16.42*	1090 *15.91*	1062 *15.50*	1039 *15.16*	1020 *14.89*
		F	2.7+5R *15.4+29R*	3.0+4R *17.1+23R*	3.4+3R *19.4+17R*	3.7+3R *21.1+17R*	4.0+2R *22.8+11R*	4.4+2R *25.1+11R*	4.7+2R *26.8+11R*	5.0+2R *28.6+11R*	5.4+2R *30.8+11R*
	VSC @ 4"	q	1642 *23.96*	1513 *22.08*	1426 *20.81*	1364 *19.91*	1318 *19.23*	1282 *18.71*	1253 *18.29*	1229 *17.94*	1057 *15.43*
		F	2.5+5R *14.3+29R*	2.7+4R *15.4+23R*	2.9+3R *16.6+17R*	3.1+3R *17.7+17R*	3.3+2R *18.8+11R*	3.6+2R *20.6+11R*	3.8+2R *21.7+11R*	4.0+2R *22.8+11R*	4.3+2R *24.6+11R*
16	VSC @ 24"	q	987 *14.40*	1025 *14.96*	825 *12.04*	865 *12.62*	740 *10.80*	776 *11.32*	688 *10.04*	720 *10.51*	652 *9.52*
		F	3.6+2R *20.6+11R*	4.0+2R *22.8+11R*	5.3+1R *30.3+6R*	5.7+1R *32.5+6R*	7.0+1R *40.0+6R*	7.4+1R *42.3+6R*	8.9+1R *50.8+6R*	9.3+1R *53.1+6R*	10.8+1R *61.7+6R*
	VSC @ 18"	q	1337 *19.51*	1252 *18.27*	1036 *15.12*	1037 *15.13*	1011 *14.75*	904 *13.19*	915 *13.35*	901 *13.15*	836 *12.20*
		F	3.0+2R *17.1+11R*	3.5+2R *20.0+11R*	4.5+1R *25.7+6R*	4.9+1R *28.0+6R*	5.4+1R *30.8+6R*	6.6+1R *37.7+6R*	7.0+1R *40.0+6R*	7.5+1R *42.8+6R*	8.7+1R *49.7+6R*
	VSC @ 12"	q	1485 *21.67*	1338 *19.53*	1239 *18.08*	1169 *17.06*	1116 *16.29*	1075 *15.69*	1042 *15.21*	1015 *14.81*	993 *14.49*
		F	2.7+2R *15.4+11R*	3.1+2R *17.7+11R*	3.6+1R *20.6+6R*	4.1+1R *23.4+6R*	4.6+1R *26.3+6R*	5.0+1R *28.6+6R*	5.5+1R *31.4+6R*	6.0+1R *34.3+6R*	6.5+1R *37.1+6R*
	VSC @ 8"	q	1671 *24.39*	1553 *22.66*	1420 *20.72*	1371 *20.01*	1294 *18.88*	1269 *18.52*	1218 *17.78*	1204 *17.57*	1167 *17.03*
		F	2.3+2R *13.1+11R*	2.6+2R *14.8+11R*	3.0+1R *17.1+6R*	3.2+1R *18.3+6R*	3.6+1R *20.6+6R*	3.9+1R *22.3+6R*	4.3+1R *24.6+6R*	4.5+1R *25.7+6R*	5.0+1R *28.6+6R*
	VSC @ 6"	q	1829 *26.69*	1675 *24.44*	1572 *22.94*	1498 *21.86*	1443 *21.06*	1400 *20.43*	1366 *19.94*	1337 *19.51*	1314 *19.18*
		F	2.1+2R *12.0+11R*	2.4+2R *13.7+11R*	2.6+1R *14.8+6R*	2.9+1R *16.6+6R*	3.1+1R *17.7+6R*	3.4+1R *19.4+6R*	3.6+1R *20.6+6R*	3.9+1R *22.3+6R*	4.1+1R *23.4+6R*
	VSC @ 4"	q	2092 *30.53*	1933 *28.21*	1827 *26.66*	1751 *25.55*	1694 *24.72*	1649 *24.07*	1614 *23.55*	1585 *23.13*	1478 *21.57*
		F	1.9+2R *10.8+11R*	2.1+2R *12.0+11R*	2.3+1R *13.1+6R*	2.4+1R *13.7+6R*	2.6+1R *14.8+6R*	2.8+1R *16.0+6R*	2.9+1R *16.6+6R*	3.1+1R *17.7+6R*	3.3+1R *18.8+6R*

SDK61 = Pneutek SDK61075 fastener
VSC = Verco Sidelap Connection

Type PLB™-36

- **7 Hilti Fastener Pattern at Supports**
  X-EDN19 at Supports 0.313-⅜" (*8.0-9.5 mm*) thick
  X-EDNK22 at Supports 0.188-0.250" (*4.8-6.4 mm*) thick
- **Sidelaps Connected with PunchLok® Tool**
- **Primer Painted or Galvanized**

Allowable Diaphragm Shear Values, q (plf, *kN/m*) and Flexibility Factors, F ((in./lb)x10^6, (*mm/N*)*x10^6*)

GAGE	SIDELAP ATTACH-MENT		SPAN (ft-in., *mm*) 4'-0" *1,220*	5'-0" *1,520*	6'-0" *1,830*	7'-0" *2,130*	8'-0" *2,440*	9'-0" *2,740*	10'-0" *3,050*	11'-0" *3,350*	12'-0" *3,660*
22	VSC @ 24"	q	687 *10.03*	627 *9.15*	527 *7.69*	501 *7.31*	442 *6.45*	428 *6.25*	388 *5.66*		
		F	11.3+23R *64.5+131R*	11.9+27R *68.0+154R*	20.4+31R *116.5+177R*	21.0+35R *119.9+200R*	32.3+38R *184.4+217R*	32.8+42R *187.3+240R*	46.9+45R *267.8+257R*		
	VSC @ 18"	q	777 *11.34*	689 *10.06*	579 *8.45*	540 *7.88*	509 *7.43*	456 *6.65*	438 *6.39*		
		F	6.9+23R *39.4+131R*	8.2+27R *46.8+154R*	13.2+31R *75.4+177R*	14.8+35R *84.5+200R*	16.7+38R *95.4+217R*	24.2+42R *138.2+240R*	26.4+45R *150.7+257R*		
	VSC @ 12"	q	853 *12.45*	743 *10.84*	666 *9.72*	609 *8.89*	565 *8.25*	530 *7.73*	501 *7.31*		
		F	5.2+23R *29.7+131R*	6.4+27R *36.5+154R*	7.7+31R *44.0+177R*	9.2+35R *52.5+200R*	10.9+38R *62.2+217R*	12.8+42R *73.1+240R*	14.9+45R *85.1+257R*		
	VSC @ 8"	q	980 *14.30*	878 *12.81*	773 *11.28*	722 *10.54*	660 *9.63*	629 *9.18*	588 *8.58*		
		F	3.9+23R *22.3+131R*	4.3+27R *24.6+154R*	5.1+31R *29.1+177R*	5.6+35R *32.0+200R*	6.6+38R *37.7+217R*	7.1+42R *40.5+240R*	8.4+45R *48.0+257R*		
	VSC @ 6"	q	1087 *15.86*	955 *13.94*	862 *12.58*	793 *11.57*	740 *10.80*	697 *10.17*	661 *9.65*		
		F	3.5+23R *20.0+131R*	3.8+27R *21.7+154R*	4.1+31R *23.4+177R*	4.5+35R *25.7+200R*	5.0+38R *28.6+217R*	5.5+42R *31.4+240R*	6.0+45R *34.3+257R*		
	VSC @ 4"	q	1267 *18.49*	1118 *16.32*	1013 *14.78*	935 *13.65*	874 *12.76*	824 *12.03*	753 *10.99*		
		F	3.1+23R *17.7+131R*	3.2+27R *18.3+154R*	3.4+31R *19.4+177R*	3.6+35R *20.6+200R*	3.8+38R *21.7+217R*	4.0+42R *22.8+240R*	4.3+45R *24.6+257R*		
20	VSC @ 24"	q	826 *12.05*	750 *10.95*	631 *9.21*	598 *8.73*	528 *7.71*	511 *7.46*	464 *6.77*	453 *6.61*	419 *6.11*
		F	10.1+13R *57.7+74R*	10.7+15R *61.1+86R*	18.5+17R *105.6+97R*	19.2+19R *109.6+108R*	29.7+21R *169.6+120R*	30.3+23R *173.0+131R*	43.6+25R *249.0+143R*	44.2+27R *252.4+154R*	60.0 +29R *342.6+166R*
	VSC @ 18"	q	929 *13.56*	821 *11.98*	691 *10.08*	644 *9.40*	606 *8.84*	544 *7.94*	522 *7.62*	503 *7.34*	465 *6.79*
		F	6.1+13R *34.8+74R*	7.3+15R *41.7+86R*	11.9+17R *68.0+97R*	13.5+19R *77.1+108R*	15.3+21R *87.4+120R*	22.3+23R *127.3+131R*	24.5+25R *139.9+143R*	26.8+27R *153.0+154R*	36.1+29R *206.1+166R*
	VSC @ 12"	q	1016 *14.83*	883 *12.89*	791 *11.54*	723 *10.55*	671 *9.79*	629 *9.18*	595 *8.68*	566 *8.26*	542 *7.91*
		F	4.5+13R *25.7+74R*	5.6+15R *32.0+86R*	6.9+17R *39.4+97R*	8.3+19R *47.4+108R*	10.0+21R *57.1+120R*	11.7+23R *66.8+131R*	13.7+25R *78.2+143R*	15.8+27R *90.2+154R*	18.1+29R *103.4+166R*
	VSC @ 8"	q	1161 *16.94*	1039 *15.16*	913 *13.32*	853 *12.45*	780 *11.38*	744 *10.86*	695 *10.14*	672 *9.81*	637 *9.30*
		F	3.4+13R *19.4+74R*	3.7+15R *21.1+86R*	4.5+17R *25.7+97R*	4.9+19R *28.0+108R*	5.9+21R *33.7+120R*	6.4+23R *36.5+131R*	7.6+25R *43.4+143R*	8.2+27R *46.8+154R*	9.6+29R *54.8+166R*
	VSC @ 6"	q	1284 *18.74*	1126 *16.43*	1017 *14.84*	935 *13.65*	872 *12.73*	822 *12.00*	780 *11.38*	745 *10.87*	688 *10.04*
		F	2.9+13R *16.6+74R*	3.2+15R *18.3+86R*	3.6+17R *20.6+97R*	4.0+19R *22.8+108R*	4.4+21R *25.1+120R*	4.9+23R *28.0+131R*	5.4+25R *30.8+143R*	5.9+27R *33.7+154R*	6.5+29R *37.1+166R*
	VSC @ 4"	q	1489 *21.73*	1313 *19.16*	1190 *17.37*	1098 *16.02*	1027 *14.99*	969 *14.14*	922 *13.46*	818 *11.94*	688 *10.04*
		F	2.6+13R *14.8+74R*	2.7+15R *15.4+86R*	2.9+17R *16.6+97R*	3.1+19R *17.7+108R*	3.3+21R *18.8+120R*	3.5+23R *20.0+131R*	3.7+25R *21.1+143R*	4.0+27R *22.8+154R*	4.3+29R *24.6+166R*

X-EDN19 = Hilti X-EDN19 THQ12 fastener
X-EDNK22 = Hilti X-EDNK22 THQ12 fastener
VSC = Verco Sidelap Connection

Type PLB™-36

- **7 Hilti Fastener Pattern at Supports**
  X-EDN19 at Supports 0.313-⅜" (*8.0-9.5 mm*) thick
  X-EDNK22 at Supports 0.188-0.250" (*4.8-6.4 mm*) thick
- **Sidelaps Connected with PunchLok® Tool**
- **Primer Painted or Galvanized**

Allowable Diaphragm Shear Values, q (plf, *kN/m*) and Flexibility Factors, F ((in./lb)x10^6, (*mm/N*)*x10*^{6})

GAGE	SIDELAP ATTACH-MENT		SPAN (ft-in., *mm*) 4'-0" *1,220*	5'-0" *1,520*	6'-0" *1,830*	7'-0" *2,130*	8'-0" *2,440*	9'-0" *2,740*	10'-0" *3,050*	11'-0" *3,350*	12'-0" *3,660*
18	VSC @ 24"	q	1040 *15.18*	941 *13.73*	793 *11.57*	750 *10.95*	663 *9.68*	640 *9.34*	583 *8.51*	569 *8.30*	528 *7.71*
		F	8.3+5R *47.4+29R*	8.9+6R *50.8+34R*	15.6+7R *89.1+40R*	16.3+8R *93.1+46R*	25.6+8R *146.2+46R*	26.3+9R *150.2+51R*	38.0+10R *217.0+57R*	38.8+11R *221.6+63R*	53.0+11R *302.6+63R*
	VSC @ 18"	q	1162 *16.96*	1025 *14.96*	864 *12.61*	804 *11.73*	757 *11.05*	680 *9.92*	653 *9.53*	630 *9.19*	584 *8.52*
		F	4.9+5R *28.0+29R*	6.0+6R *34.3+34R*	10.0+7R *57.1+40R*	11.4+8R *65.1+46R*	13.1+8R *74.8+46R*	19.3+9R *110.2+51R*	21.3+10R *121.6+57R*	23.5+11R *134.2+63R*	31.9+11R *182.2+63R*
	VSC @ 12"	q	1265 *18.46*	1099 *16.04*	984 *14.36*	900 *13.13*	835 *12.19*	784 *11.44*	742 *10.83*	707 *10.32*	678 *9.89*
		F	3.6+5R *20.6+29R*	4.6+6R *26.3+34R*	5.7+7R *32.5+40R*	7.0+8R *40.0+46R*	8.4+8R *48.0+46R*	10.0+9R *57.1+51R*	11.8+10R *67.4+57R*	13.8+11R *78.8+63R*	15.9+11R *90.8+63R*
	VSC @ 8"	q	1438 *20.99*	1285 *18.75*	1131 *16.51*	1056 *15.41*	967 *14.11*	923 *13.47*	864 *12.61*	835 *12.19*	793 *11.57*
		F	2.6+5R *14.8+29R*	2.9+6R *16.6+34R*	3.6+7R *20.6+40R*	4.0+8R *22.8+46R*	4.9+8R *28.0+46R*	5.4+9R *30.8+51R*	6.5+10R *37.1+57R*	7.0+11R *40.0+63R*	8.3+11R *47.4+63R*
	VSC @ 6"	q	1583 *23.10*	1389 *20.27*	1254 *18.30*	1155 *16.86*	1078 *15.73*	1017 *14.84*	967 *14.11*	925 *13.50*	890 *12.99*
		F	2.3+5R *13.1+29R*	2.5+6R *14.3+34R*	2.8+7R *16.0+40R*	3.2+8R *18.3+46R*	3.6+8R *20.6+46R*	4.0+9R *22.8+51R*	4.5+10R *25.7+57R*	5.0+11R *28.6+63R*	5.5+11R *31.4+63R*
	VSC @ 4"	q	1827 *26.66*	1612 *23.53*	1462 *21.34*	1350 *19.70*	1264 *18.45*	1195 *17.44*	1139 *16.62*	1092 *15.94*	1052 *15.35*
		F	2.0+5R *11.4+29R*	2.1+6R *12.0+34R*	2.3+7R *13.1+40R*	2.4+8R *13.7+46R*	2.6+8R *14.8+46R*	2.8+9R *16.0+51R*	3.0+10R *17.1+57R*	3.2+11R *18.3+63R*	3.5+11R *20.0+63R*
16	VSC @ 24"	q	1215 *17.73*	1096 *15.99*	926 *13.51*	874 *12.76*	775 *11.31*	748 *10.92*	682 *9.95*	667 *9.73*	619 *9.03*
		F	7.0+2R *40.0+11R*	7.6+3R *43.4+17R*	13.6+3R *77.7+17R*	14.3+4R *81.7+23R*	22.6+4R *129.0+23R*	23.4+4R *133.6+23R*	34.0+5R *194.1+29R*	34.9+5R *199.3+29R*	47.9+5R *273.5+29R*
	VSC @ 18"	q	1352 *19.73*	1191 *17.38*	1007 *14.70*	937 *13.67*	881 *12.86*	794 *11.59*	763 *11.14*	736 *10.74*	683 *9.97*
		F	4.1+2R *23.4+11R*	5.1+3R *29.1+17R*	8.7+3R *49.7+17R*	10.0+4R *57.1+23R*	11.5+4R *65.7+23R*	17.1+4R *97.6+23R*	19.0+5R *108.5+29R*	21.1+5R *120.5+29R*	28.7+5R *163.9+29R*
	VSC @ 12"	q	1468 *21.42*	1275 *18.61*	1142 *16.67*	1045 *15.25*	971 *14.17*	912 *13.31*	864 *12.61*	825 *12.04*	791 *11.54*
		F	3.0+2R *17.1+11R*	3.9+3R *22.3+17R*	4.9+3R *28.0+17R*	6.1+4R *34.8+23R*	7.4+4R *42.3+23R*	8.9+4R *50.8+23R*	10.5+5R *60.0+29R*	12.3+5R *70.2+29R*	14.2+5R *81.1+29R*
	VSC @ 8"	q	1662 *24.26*	1485 *21.67*	1309 *19.10*	1223 *17.85*	1121 *16.36*	1071 *15.63*	1004 *14.65*	972 *14.19*	924 *13.48*
		F	2.2+2R *12.6+11R*	2.5+3R *14.3+17R*	3.1+3R *17.7+17R*	3.4+4R *19.4+23R*	4.2+4R *24.0+23R*	4.7+4R *26.8+23R*	5.7+5R *32.5+29R*	6.2+5R *35.4+29R*	7.4+5R *42.3+29R*
	VSC @ 6"	q	1826 *26.65*	1603 *23.39*	1449 *21.15*	1335 *19.48*	1248 *18.21*	1179 *17.21*	1122 *16.37*	1075 *15.69*	1036 *15.12*
		F	1.9+2R *10.8+11R*	2.1+3R *12.0+17R*	2.4+3R *13.7+17R*	2.7+4R *15.4+23R*	3.0+4R *17.1+23R*	3.4+4R *19.4+23R*	3.9+5R *22.3+29R*	4.3+5R *24.6+29R*	4.9+5R *28.0+29R*
	VSC @ 4"	q	2100 *30.65*	1854 *27.06*	1684 *24.58*	1558 *22.74*	1461 *21.32*	1383 *20.18*	1320 *19.26*	1268 *18.51*	1223 *17.85*
		F	1.6+2R *9.1+11R*	1.7+3R *9.7+17R*	1.9+3R *10.8+17R*	2.0+4R *11.4+23R*	2.2+4R *12.6+23R*	2.3+4R *13.1+23R*	2.5+5R *14.3+29R*	2.8+5R *16.0+29R*	3.0+5R *17.1+29R*

X-EDN19 = Hilti X-EDN19 THQ12 fastener
X-EDNK22 = Hilti X-EDNK22 THQ12 fastener
VSC = Verco Sidelap Connection

Type PLB™-36

- **7 Hilti Fastener Pattern at Supports**
  X-EDN19 at Supports 0.250-0.313" (*6.4-8.0 mm*) thick
- **Sidelaps Connected with PunchLok® Tool**
- **Primer Painted or Galvanized**

Allowable Diaphragm Shear Values, q (plf, *kN/m*) and Flexibility Factors, F ((in./lb)x10^6, (*mm/N*)*x10^6*)

GAGE	SIDELAP ATTACH-MENT		SPAN (ft-in., *mm*) 4'-0" *1,220*	5'-0" *1,520*	6'-0" *1,830*	7'-0" *2,130*	8'-0" *2,440*	9'-0" *2,740*	10'-0" *3,050*	11'-0" *3,350*	12'-0" *3,660*
22	VSC @ 24"	q	563 *8.22*	514 *7.50*	432 *6.30*	411 *6.00*	362 *5.28*	351 *5.12*	318 *4.64*		
		F	17.0+23R *97.1+131R*	17.9+27R *102.2+154R*	30.6+31R *174.7+177R*	31.5+35R *179.9+200R*	48.5+38R *276.9+217R*	49.2+42R *280.9+240R*	70.4+45R *402.0+257R*		
	VSC @ 18"	q	637 *9.30*	565 *8.25*	475 *6.93*	443 *6.47*	417 *6.09*	374 *5.46*	359 *5.24*		
		F	10.4+23R *59.4+131R*	12.3+27R *70.2+154R*	19.8+31R *113.1+177R*	22.2+35R *126.8+200R*	25.1+38R *143.3+217R*	36.3+42R *207.3+240R*	39.6+45R *226.1+257R*		
	VSC @ 12"	q	699 *10.20*	609 *8.89*	546 *7.97*	499 *7.28*	463 *6.76*	435 *6.35*	411 *6.00*		
		F	7.8+23R *44.5+131R*	9.6+27R *54.8+154R*	11.6+31R *66.2+177R*	13.8+35R *78.8+200R*	16.4+38R *93.6+217R*	19.2+42R *109.6+240R*	22.4+45R *127.9+257R*		
	VSC @ 8"	q	804 *11.73*	720 *10.51*	634 *9.25*	592 *8.64*	541 *7.90*	516 *7.53*	482 *7.03*		
		F	5.9+23R *33.7+131R*	6.5+27R *37.1+154R*	7.7+31R *44.0+177R*	8.4+35R *48.0+200R*	9.9+38R *56.5+217R*	10.7+42R *61.1+240R*	12.6+45R *71.9+257R*		
	VSC @ 6"	q	891 *13.00*	783 *11.43*	707 *10.32*	650 *9.49*	607 *8.86*	572 *8.35*	542 *7.91*		
		F	5.3+23R *30.3+131R*	5.7+27R *32.5+154R*	6.2+31R *35.4+177R*	6.8+35R *38.8+200R*	7.5+38R *42.8+217R*	8.3+42R *47.4+240R*	9.0+45R *51.4+257R*		
	VSC @ 4"	q	1039 *15.16*	917 *13.38*	831 *12.13*	767 *11.19*	717 *10.46*	676 *9.87*	617 *9.00*		
		F	4.7+23R *26.8+131R*	4.8+27R *27.4+154R*	5.1+31R *29.1+177R*	5.4+35R *30.8+200R*	5.7+38R *32.5+217R*	6.0+42R *34.3+240R*	6.5+45R *37.1+257R*		
20	VSC @ 24"	q	677 *9.88*	615 *8.98*	517 *7.55*	490 *7.15*	433 *6.32*	419 *6.11*	380 *5.55*	371 *5.41*	344 *5.02*
		F	15.2+13R *86.8+74R*	16.1+15R *91.9+86R*	27.8+17R *158.7+97R*	28.8+19R *164.5+108R*	44.6+21R *254.7+120R*	45.5+23R *259.8+131R*	65.4+25R *373.4+143R*	66.3+27R *378.6+154R*	90.0+29R *513.9+166R*
	VSC @ 18"	q	762 *11.12*	673 *9.82*	567 *8.27*	528 *7.71*	497 *7.25*	446 *6.51*	428 *6.25*	412 *6.01*	381 *5.56*
		F	9.1+13R *52.0+74R*	11.0+15R *62.8+86R*	17.9+17R *102.2+97R*	20.3+19R *115.9+108R*	23.0+21R *131.3+120R*	33.5+23R *191.3+131R*	36.8+25R *210.1+143R*	40.2+27R *229.5+154R*	54.2+29R *309.5+166R*
	VSC @ 12"	q	833 *12.16*	724 *10.57*	649 *9.47*	593 *8.65*	550 *8.03*	516 *7.53*	488 *7.12*	464 *6.77*	444 *6.48*
		F	6.8+13R *38.8+74R*	8.4+15R *48.0+86R*	10.4+17R *59.4+97R*	12.5+19R *71.4+108R*	15.0+21R *85.7+120R*	17.6+23R *100.5+131R*	20.6+25R *117.6+143R*	23.7+27R *135.3+154R*	27.2+29R *155.3+166R*
	VSC @ 8"	q	952 *13.89*	852 *12.43*	749 *10.93*	699 *10.20*	640 *9.34*	610 *8.90*	570 *8.32*	551 *8.04*	522 *7.62*
		F	5.1+13R *29.1+74R*	5.6+15R *32.0+86R*	6.8+17R *38.8+97R*	7.4+19R *42.3+108R*	8.8+21R *50.2+120R*	9.6+23R *54.8+131R*	11.4+25R *65.1+143R*	12.3+27R *70.2+154R*	14.4+29R *82.2+166R*
	VSC @ 6"	q	1053 *15.37*	923 *13.47*	834 *12.17*	767 *11.19*	715 *10.43*	674 *9.84*	640 *9.34*	611 *8.92*	564 *8.23*
		F	4.4+13R *25.1+74R*	4.8+15R *27.4+86R*	5.4+17R *30.8+97R*	6.0+19R *34.3+108R*	6.6+21R *37.7+120R*	7.4+23R *42.3+131R*	8.1+25R *46.3+143R*	8.9+27R *50.8+154R*	9.8+29R *56.0+166R*
	VSC @ 4"	q	1221 *17.82*	1077 *15.72*	976 *14.24*	900 *13.13*	842 *12.29*	795 *11.60*	756 *11.03*	671 *9.79*	564 *8.23*
		F	3.9+13R *22.3+74R*	4.1+15R *23.4+86R*	4.4+17R *25.1+97R*	4.7+19R *26.8+108R*	5.0+21R *28.6+120R*	5.3+23R *30.3+131R*	5.6+25R *32.0+143R*	6.0+27R *34.3+154R*	6.5+29R *37.1+166R*

X-EDN19 = Hilti X-EDN19 THQ12 fastener
VSC = Verco Sidelap Connection

Type PLB™-36

- **7 Hilti Fastener Pattern at Supports**
- **X-EDN19 at Supports 0.250-0.313" (*6.4-8.0 mm*) thick**
- **Sidelaps Connected with PunchLok® Tool**
- **Primer Painted or Galvanized**

Allowable Diaphragm Shear Values, q (plf, *kN/m*) and Flexibility Factors, F ((in./lb)x10^6, (*mm/N*)*x10*^{6})

GAGE	SIDELAP ATTACH-MENT		SPAN (ft-in., *mm*) 4'-0" *1,220*	5'-0" *1,520*	6'-0" *1,830*	7'-0" *2,130*	8'-0" *2,440*	9'-0" *2,740*	10'-0" *3,050*	11'-0" *3,350*	12'-0" *3,660*
18	VSC @ 24"	q	853 *12.45*	772 *11.27*	650 *9.49*	615 *8.98*	544 *7.94*	525 *7.66*	478 *6.98*	467 *6.82*	433 *6.32*
		F	12.5+5R *71.4+29R*	13.4+6R *76.5+34R*	23.4+7R *133.6+40R*	24.5+8R *139.9+46R*	38.4+8R *219.3+46R*	39.5+9R *225.6+51R*	57.0+10R *325.5+57R*	58.2+11R *332.3+63R*	79.5+11R *454.0+63R*
	VSC @ 18"	q	953 *13.91*	841 *12.27*	708 *10.33*	659 *9.62*	621 *9.06*	558 *8.14*	535 *7.81*	517 *7.55*	479 *6.99*
		F	7.4+5R *42.3+29R*	9.0+6R *51.4+34R*	15.0+7R *85.7+40R*	17.1+8R *97.6+46R*	19.7+8R *112.5+46R*	29.0+9R *165.6+51R*	32.0+10R *182.7+57R*	35.3+11R *201.6+63R*	47.9+11R *273.5+63R*
	VSC @ 12"	q	1037 *15.13*	901 *13.15*	807 *11.78*	738 *10.77*	685 *10.00*	643 *9.38*	608 *8.87*	580 *8.46*	556 *8.11*
		F	5.4+5R *30.8+29R*	6.9+6R *39.4+34R*	8.6+7R *49.1+40R*	10.5+8R *60.0+46R*	12.6+8R *71.9+46R*	15.0+9R *85.7+51R*	17.7+10R *101.1+57R*	20.7+11R *118.2+63R*	23.9+11R *136.5+63R*
	VSC @ 8"	q	1179 *17.21*	1054 *15.38*	927 *13.53*	866 *12.64*	793 *11.57*	757 *11.05*	708 *10.33*	685 *10.00*	650 *9.49*
		F	3.9+5R *22.3+29R*	4.4+6R *25.1+34R*	5.4+7R *30.8+40R*	6.0+8R *34.3+46R*	7.4+8R *42.3+46R*	8.1+9R *46.3+51R*	9.7+10R *55.4+57R*	10.5+11R *60.0+63R*	12.5+11R *71.4+63R*
	VSC @ 6"	q	1298 *18.94*	1139 *16.62*	1028 *15.00*	947 *13.82*	884 *12.90*	834 *12.17*	793 *11.57*	759 *11.08*	730 *10.65*
		F	3.5+5R *20.0+29R*	3.8+6R *21.7+34R*	4.2+7R *24.0+40R*	4.8+8R *27.4+46R*	5.4+8R *30.8+46R*	6.0+9R *34.3+51R*	6.8+10R *38.8+57R*	7.5+11R *42.8+63R*	8.3+11R *47.4+63R*
	VSC @ 4"	q	1498 *21.86*	1322 *19.29*	1199 *17.50*	1107 *16.16*	1036 *15.12*	980 *14.30*	934 *13.63*	895 *13.06*	863 *12.59*
		F	3.0+5R *17.1+29R*	3.2+6R *18.3+34R*	3.5+7R *20.0+40R*	3.6+8R *20.6+46R*	3.9+8R *22.3+46R*	4.2+9R *24.0+51R*	4.5+10R *25.7+57R*	4.8+11R *27.4+63R*	5.3+11R *30.3+63R*
16	VSC @ 24"	q	996 *14.54*	899 *13.12*	759 *11.08*	717 *10.46*	636 *9.28*	613 *8.95*	559 *8.16*	547 *7.98*	508 *7.41*
		F	10.5+2R *60.0+11R*	11.4+3R *65.1+17R*	20.4+3R *116.5+17R*	21.5+4R *122.8+23R*	33.9+4R *193.6+23R*	35.1+4R *200.4+23R*	51.0+5R *291.2+29R*	52.4+5R *299.2+29R*	71.9+5R *410.6+29R*
	VSC @ 18"	q	1109 *16.18*	977 *14.26*	826 *12.05*	768 *11.21*	722 *10.54*	651 *9.50*	626 *9.14*	604 *8.81*	560 *8.17*
		F	6.2+2R *35.4+11R*	7.7+3R *44.0+17R*	13.1+3R *74.8+17R*	15.0+4R *85.7+23R*	17.3+4R *98.8+23R*	25.7+4R *146.8+23R*	28.5+5R *162.7+29R*	31.7+5R *181.0+29R*	43.1+5R *246.1+29R*
	VSC @ 12"	q	1204 *17.57*	1046 *15.27*	936 *13.66*	857 *12.51*	796 *11.62*	748 *10.92*	708 *10.33*	677 *9.88*	649 *9.47*
		F	4.5+2R *25.7+11R*	5.9+3R *33.7+17R*	7.4+3R *42.3+17R*	9.1+4R *52.0+23R*	11.1+4R *63.4+23R*	13.4+4R *76.5+23R*	15.8+5R *90.2+29R*	18.5+5R *105.6+29R*	21.3+5R *121.6+29R*
	VSC @ 8"	q	1363 *19.89*	1218 *17.78*	1073 *15.66*	1003 *14.64*	919 *13.41*	878 *12.81*	823 *12.01*	797 *11.63*	758 *11.06*
		F	3.3+2R *18.8+11R*	3.8+3R *21.7+17R*	4.7+3R *26.8+17R*	5.1+4R *29.1+23R*	6.3+4R *36.0+23R*	7.1+4R *40.5+23R*	8.6+5R *49.1+29R*	9.3+5R *53.1+29R*	11.1+5R *63.4+29R*
	VSC @ 6"	q	1497 *21.85*	1314 *19.18*	1188 *17.34*	1095 *15.98*	1023 *14.93*	967 *14.11*	920 *13.43*	882 *12.87*	850 *12.40*
		F	2.9+2R *16.6+11R*	3.2+3R *18.3+17R*	3.6+3R *20.6+17R*	4.1+4R *23.4+23R*	4.5+4R *25.7+23R*	5.1+4R *29.1+23R*	5.9+5R *33.7+29R*	6.5+5R *37.1+29R*	7.4S+5R *42.3+29R*
	VSC @ 4"	q	1722 *25.13*	1520 *22.18*	1381 *20.15*	1278 *18.65*	1198 *17.48*	1134 *16.55*	1082 *15.79*	1040 *15.18*	1003 *14.64*
		F	2.4+2R *13.7+11R*	2.6+3R *14.8+17R*	2.9+3R *16.6+17R*	3.0+4R *17.1+23R*	3.3+4R *18.8+23R*	3.5+4R *20.0+23R*	3.8+5R *21.7+29R*	4.2+5R *24.0+29R*	4.5+5R *25.7+29R*

X-EDN19 = Hilti X-EDN19 THQ12 fastener
VSC = Verco Sidelap Connection

Type PLB™-36

- **7 Hilti Fastener Pattern at Supports**
  X-EDNK22 at Supports ⅛-0.188" (*3.2-4.8 mm*) thick
- **Sidelaps Connected with PunchLok® Tool**
- **Primer Painted or Galvanized**

Allowable Diaphragm Shear Values, q (plf, *kN/m*) and Flexibility Factors, F ((in./lb)x10^6, (*mm/N*)*x10^6*)

GAGE	SIDELAP ATTACH-MENT		SPAN (ft-in., *mm*) 4'-0" *1,220*	5'-0" *1,520*	6'-0" *1,830*	7'-0" *2,130*	8'-0" *2,440*	9'-0" *2,740*	10'-0" *3,050*	11'-0" *3,350*	12'-0" *3,660*
22	VSC @ 24"	q	522 *7.62*	477 *6.96*	401 *5.85*	381 *5.56*	336 *4.90*	325 *4.74*	295 *4.31*		
		F	18.1+23R *103.4+131R*	19.0+27R *108.5+154R*	32.6+31R *186.2+177R*	33.6+35R *191.9+200R*	51.7+38R *295.2+217R*	52.5+42R *299.8+240R*	75.0+45R *428.3+257R*		
	VSC @ 18"	q	591 *8.62*	524 *7.65*	440 *6.42*	410 *5.98*	387 *5.65*	347 *5.06*	333 *4.86*		
		F	11.0+23R *62.8+131R*	13.1+27R *74.8+154R*	21.1+31R *120.5+177R*	23.7+35R *135.3+200R*	26.7+38R *152.5+217R*	38.7+42R *221.0+240R*	42.2+45R *241.0+257R*		
	VSC @ 12"	q	648 *9.46*	565 *8.25*	506 *7.38*	463 *6.76*	429 *6.26*	403 *5.88*	381 *5.56*		
		F	8.3+23R *47.4+131R*	10.2+27R *58.2+154R*	12.3+31R *70.2+177R*	14.7+35R *83.9+200R*	17.4+38R *99.4+217R*	20.5+42R *117.1+240R*	23.8+45R *135.9+257R*		
	VSC @ 8"	q	745 *10.87*	667 *9.73*	587 *8.57*	549 *8.01*	502 *7.33*	478 *6.98*	447 *6.52*		
		F	6.2+23R *35.4+131R*	6.9+27R *39.4+154R*	8.2+31R *46.8+177R*	9.0+35R *51.4+200R*	10.6+38R *60.5+217R*	11.4+42R *65.1+240R*	13.4+45R *76.5+257R*		
	VSC @ 6"	q	826 *12.05*	726 *10.60*	655 *9.56*	603 *8.80*	562 *8.20*	530 *7.73*	502 *7.33*		
		F	5.6+23R *32.0+131R*	6.1+27R *34.8+154R*	6.6+31R *37.7+177R*	7.2+35R *41.1+200R*	8.0+38R *45.7+217R*	8.8+42R *50.2+240R*	9.6+45R *54.8+257R*		
	VSC @ 4"	q	963 *14.05*	850 *12.40*	770 *11.24*	711 *10.38*	664 *9.69*	626 *9.14*	572 *8.35*		
		F	5.0+23R *28.6+131R*	5.1+27R *29.1+154R*	5.4+31R *30.8+177R*	5.8+35R *33.1+200R*	6.1+38R *34.8+217R*	6.4+42R *36.5+240R*	6.9+45R *39.4+257R*		
20	VSC @ 24"	q	628 *9.16*	570 *8.32*	480 *7.01*	454 *6.63*	401 *5.85*	388 *5.66*	353 *5.15*	344 *5.02*	318 *4.64*
		F	16.2+13R *92.5+74R*	17.1+15R *97.6+86R*	29.6+17R *169.0+97R*	30.7+19R *175.3+108R*	47.5+21R *271.2+120R*	48.5+23R *276.9+131R*	69.8+25R *398.6+143R*	70.7+27R *403.7+154R*	96.0+29R *548.2+166R*
	VSC @ 18"	q	706 *10.30*	624 *9.11*	525 *7.66*	489 *7.14*	461 *6.73*	413 *6.03*	397 *5.79*	382 *5.57*	353 *5.15*
		F	9.8+13R *56.0+74R*	11.7+15R *66.8+86R*	19.0+17R *108.5+97R*	21.6+19R *123.3+108R*	24.5+21R *139.9+120R*	35.7+23R *203.9+131R*	39.2+25R *223.8+143R*	42.9+27R *245.0+154R*	57.8+29R *330.0+166R*
	VSC @ 12"	q	772 *11.27*	671 *9.79*	601 *8.77*	549 *8.01*	510 *7.44*	478 *6.98*	452 *6.60*	430 *6.28*	412 *6.01*
		F	7.2+13R *41.1+74R*	9.0+15R *51.4+86R*	11.0+17R *62.8+97R*	13.3+19R *75.9+108R*	16.0+21R *91.4+120R*	18.7+23R *106.8+131R*	21.9+25R *125.1+143R*	25.3+27R *144.5+154R*	29.0+29R *165.6+166R*
	VSC @ 8"	q	882 *12.87*	790 *11.53*	694 *10.13*	648 *9.46*	593 *8.65*	565 *8.25*	528 *7.71*	511 *7.46*	484 *7.06*
		F	5.4+13R *30.8+74R*	5.9+15R *33.7+86R*	7.2+17R *41.1+97R*	7.8+19R *44.5+108R*	9.4+21R *53.7+120R*	10.2+23R *58.2+131R*	12.2+25R *69.7+143R*	13.1+27R *74.8+154R*	15.4+29R *87.9+166R*
	VSC @ 6"	q	976 *14.24*	856 *12.49*	773 *11.28*	711 *10.38*	663 *9.68*	625 *9.12*	593 *8.65*	566 *8.26*	523 *7.63*
		F	4.6+13R *26.3+74R*	5.1+15R *29.1+86R*	5.8+17R *33.1+97R*	6.4+19R *36.5+108R*	7.0+21R *40.0+120R*	7.8+23R *44.5+131R*	8.6+25R *49.1+143R*	9.4+27R *53.7+154R*	10.4+29R *59.4+166R*
	VSC @ 4"	q	1132 *16.52*	998 *14.56*	904 *13.19*	834 *12.17*	781 *11.40*	736 *10.74*	701 *10.23*	622 *9.08*	523 *7.63*
		F	4.2+13R *24.0+74R*	4.3+15R *24.6+86R*	4.6+17R *26.3+97R*	5.0+19R *28.6+108R*	5.3+21R *30.3+120R*	5.6+23R *32.0+131R*	5.9+25R *33.7+143R*	6.4+27R *36.5+154R*	6.9+29R *39.4+166R*

X-EDNK22 = Hilti X-EDNK22 THQ12 fastener
VSC = Verco Sidelap Connection

Type PLB™-36

- **7 Hilti Fastener Pattern at Supports**
- **X-EDNK22 at Supports ⅛-0.188" (*3.2-4.8 mm*) thick**
- **Sidelaps Connected with PunchLok® Tool**
- **Primer Painted or Galvanized**

Allowable Diaphragm Shear Values, q (plf, *kN/m*) and Flexibility Factors, F ((in./lb)x10^6, (*mm/N*)*x10*^{6})

GAGE	SIDELAP ATTACH-MENT		SPAN (ft-in., *mm*) 4'-0" *1,220*	5'-0" *1,520*	6'-0" *1,830*	7'-0" *2,130*	8'-0" *2,440*	9'-0" *2,740*	10'-0" *3,050*	11'-0" *3,350*	12'-0" *3,660*
18	VSC @ 24"	q	790 *11.53*	715 *10.43*	603 *8.80*	570 *8.32*	504 *7.36*	486 *7.09*	443 *6.47*	432 *6.30*	401 *5.85*
		F	13.3+5R *75.9+29R*	14.2+6R *81.1+34R*	25.0+7R *142.8+40R*	26.1+8R *149.0+46R*	41.0+8R *234.1+46R*	42.1+9R *240.4+51R*	60.8+10R *347.2+57R*	62.1+11R *354.6+63R*	84.8+11R *484.2+63R*
	VSC @ 18"	q	883 *12.89*	779 *11.37*	657 *9.59*	611 *8.92*	575 *8.39*	517 *7.55*	496 *7.24*	479 *6.99*	444 *6.48*
		F	7.8+5R *44.5+29R*	9.6+6R *54.8+34R*	16.0+7R *91.4+40R*	18.2+8R *103.9+46R*	21.0+8R *119.9+46R*	30.9+9R *176.4+51R*	34.1+10R *194.7+57R*	37.6+11R *214.7+63R*	51.0+11R *291.2+63R*
	VSC @ 12"	q	961 *14.02*	835 *12.19*	748 *10.92*	684 *9.98*	635 *9.27*	596 *8.70*	564 *8.23*	537 *7.84*	515 *7.52*
		F	5.8+5R *33.1+29R*	7.4+6R *42.3+34R*	9.1+7R *52.0+40R*	11.2+8R *64.0+46R*	13.4+8R *76.5+46R*	16.0+9R *91.4+51R*	18.9+10R *107.9+57R*	22.1+11R *126.2+63R*	25.4+11R *145.0+63R*
	VSC @ 8"	q	1093 *15.95*	977 *14.26*	860 *12.55*	803 *11.72*	735 *10.73*	701 *10.23*	657 *9.59*	635 *9.27*	603 *8.80*
		F	4.2+5R *24.0+29R*	4.6+6R *26.3+34R*	5.8+7R *33.1+40R*	6.4+8R *36.5+46R*	7.8+8R *44.5+46R*	8.6+9R *49.1+51R*	10.4+10R *59.4+57R*	11.2+11R *64.0+63R*	13.3+11R *75.9+63R*
	VSC @ 6"	q	1203 *17.56*	1056 *15.41*	953 *13.91*	878 *12.81*	819 *11.95*	773 *11.28*	735 *10.73*	703 *10.26*	676 *9.87*
		F	3.7+5R *21.1+29R*	4.0+6R *22.8+34R*	4.5+7R *25.7+40R*	5.1+8R *29.1+46R*	5.8+8R *33.1+46R*	6.4+9R *36.5+51R*	7.2+10R *41.1+57R*	8.0+11R *45.7+63R*	8.8+11R *50.2+63R*
	VSC @ 4"	q	1389 *20.27*	1225 *17.88*	1111 *16.21*	1026 *14.97*	961 *14.02*	908 *13.25*	866 *12.64*	830 *12.11*	800 *11.68*
		F	3.2+5R *18.3+29R*	3.4+6R *19.4+34R*	3.7+7R *21.1+40R*	3.8+8R *21.7+46R*	4.2+8R *24.0+46R*	4.5+9R *25.7+51R*	4.8+10R *27.4+57R*	5.1+11R *29.1+63R*	5.6+11R *32.0+63R*
16	VSC @ 24"	q	923 *13.47*	833 *12.16*	704 *10.27*	664 *9.69*	589 *8.60*	568 *8.29*	518 *7.56*	507 *7.40*	470 *6.86*
		F	11.2+2R *64.0+11R*	12.2+3R *69.7+17R*	21.8+3R *124.5+17R*	22.9+4R *130.8+23R*	36.2+4R *206.7+23R*	37.4+4R *213.6+23R*	54.4+5R *310.6+29R*	55.8+5R *318.6+29R*	76.6+5R *437.4+29R*
	VSC @ 18"	q	1028 *15.00*	905 *13.21*	765 *11.16*	712 *10.39*	670 *9.78*	603 *8.80*	580 *8.46*	559 *8.16*	519 *7.57*
		F	6.6+2R *37.7+11R*	8.2+3R *46.8+17R*	13.9+3R *79.4+17R*	16.0+4R *91.4+23R*	18.4+4R *105.1+23R*	27.4+4R *156.5+23R*	30.4+5R *173.6+29R*	33.8+5R *193.0+29R*	45.9+5R *262.1+29R*
	VSC @ 12"	q	1116 *16.29*	969 *14.14*	868 *12.67*	794 *11.59*	738 *10.77*	693 *10.11*	657 *9.59*	627 *9.15*	601 *8.77*
		F	4.8+2R *27.4+11R*	6.2+3R *35.4+17R*	7.8+3R *44.5+17R*	9.8+4R *56.0+23R*	11.8+4R *67.4+23R*	14.2+4R *81.1+23R*	16.8+5R *95.9+29R*	19.7+5R *112.5+29R*	22.7+5R *129.6+29R*
	VSC @ 8"	q	1263 *18.43*	1129 *16.48*	995 *14.52*	929 *13.56*	852 *12.43*	814 *11.88*	763 *11.14*	739 *10.78*	702 *10.24*
		F	3.5+2R *20.0+11R*	4.0+3R *22.8+17R*	5.0+3R *28.6+17R*	5.4+4R *30.8+23R*	6.7+4R *38.3+23R*	7.5+4R *42.8+23R*	9.1+5R *52.0+29R*	9.9+5R *56.5+29R*	11.8+5R *67.4+29R*
	VSC @ 6"	q	1388 *20.26*	1218 *17.78*	1101 *16.07*	1015 *14.81*	948 *13.84*	896 *13.08*	853 *12.45*	817 *11.92*	787 *11.49*
		F	3.0+2R *17.1+11R*	3.4+3R *19.4+17R*	3.8+3R *21.7+17R*	4.3+4R *24.6+23R*	4.8+4R *27.4+23R*	5.4+4R *30.8+23R*	6.2+5R *35.4+29R*	6.9+5R *39.4+29R*	7.8+5R *44.5+29R*
	VSC @ 4"	q	1596 *23.29*	1409 *20.56*	1280 *18.68*	1184 *17.28*	1110 *16.20*	1051 *15.34*	1003 *14.64*	964 *14.07*	929 *13.56*
		F	2.6+2R *14.8+11R*	2.7+3R *15.4+17R*	3.0+3R *17.1+17R*	3.2+4R *18.3+23R*	3.5+4R *20.0+23R*	3.7+4R *21.1+23R*	4.0+5R *22.8+29R*	4.5+5R *25.7+29R*	4.8+5R *27.4+29R*

X-EDNK22 = Hilti X-EDNK22 THQ12 fastener
VSC = Verco Sidelap Connection

Type PLB™-36

- **4 Weld Pattern at Supports**
- **Sidelaps Connected with PunchLok® Tool**
- **Primer Painted or Galvanized**

Allowable Diaphragm Shear Values, q (plf, *kN/m*) and Flexibility Factors, F ((in./lb)x10^6, (*mm/N*)*x10*^{6})

GAGE	SIDELAP ATTACH-MENT		SPAN (ft-in., *mm*)								
			4'-0" *1,220*	5'-0" *1,520*	6'-0" *1,830*	7'-0" *2,130*	8'-0" *2,440*	9'-0" *2,740*	10'-0" *3,050*	11'-0" *3,350*	12'-0" *3,660*
22	VSC @ 24"	q	545 *7.95*	497 *7.25*	434 *6.33*	417 *6.09*	380 *5.55*	374 *5.46*	349 *5.09*		
		F	13.7+161R *78.2+919R*	16.4+115R *93.6+657R*	20.2+87R *115.3+497R*	22.7+69R *129.6+394R*	26.6+57R *151.9+325R*	29.0+48R *165.6+274R*	32.9+41R *187.9+234R*		
	VSC @ 18"	q	590 *8.61*	531 *7.75*	465 *6.79*	443 *6.47*	426 *6.22*	395 *5.76*	387 *5.65*		
		F	12.8+161R *73.1+919R*	15.5+115R *88.5+657R*	19.0+87R *108.5+497R*	21.6+69R *123.3+394R*	24.0+57R *137.0+325R*	27.6+48R *157.6+274R*	29.9+41R *170.7+234R*		
	VSC @ 12"	q	627 *9.15*	561 *8.19*	518 *7.56*	487 *7.11*	465 *6.79*	449 *6.55*	436 *6.36*		
		F	12.2+161R *69.7+919R*	14.8+115R *84.5+657R*	17.4+87R *99.4+497R*	19.9+69R *113.6+394R*	22.3+57R *127.3+325R*	24.6+48R *140.5+274R*	26.9+41R *153.6+234R*		
	VSC @ 8"	q	691 *10.08*	636 *9.28*	582 *8.49*	561 *8.19*	531 *7.75*	522 *7.62*	503 *7.34*		
		F	11.4+161R *65.1+919R*	13.4+115R *76.5+657R*	15.8+87R *90.2+497R*	17.6+69R *100.5+394R*	19.9+57R *113.6+325R*	21.6+48R *123.3+274R*	23.7+41R *135.3+234R*		
	VSC @ 6"	q	744 *10.86*	679 *9.91*	636 *9.28*	607 *8.86*	586 *8.55*	571 *8.33*	559 *8.16*		
		F	10.8+161R *61.7+919R*	12.8+115R *73.1+657R*	14.7+87R *83.9+497R*	16.5+69R *94.2+394R*	18.2+57R *103.9+325R*	19.9+48R *113.6+274R*	21.6+41R *123.3+234R*		
	VSC @ 4"	q	833 *12.16*	769 *11.22*	727 *10.61*	699 *10.20*	679 *9.91*	665 *9.70*	654 *9.54*		
		F	9.9+161R *56.5+919R*	11.6+115R *66.2+657R*	13.2+87R *75.4+497R*	14.7+69R *83.9+394R*	16.1+57R *91.9+325R*	17.5+48R *99.9+274R*	18.9+41R *107.9+234R*		
20	VSC @ 24"	q	802 *11.70*	722 *10.54*	628 *9.16*	598 *8.73*	544 *7.94*	532 *7.76*	496 *7.24*	492 *7.18*	466 *6.80*
		F	10.4+111R *59.4+634R*	12.6+80R *71.9+457R*	15.6+61R *89.1+348R*	17.8+48R *101.6+274R*	20.9+39R *119.3+223R*	22.9+33R *130.8+188R*	26.1+28R *149.0+160R*	28.0+24R *159.9+137R*	31.2+21R *178.2+120R*
	VSC @ 18"	q	861 *12.57*	767 *11.19*	670 *9.78*	633 *9.24*	606 *8.84*	560 *8.17*	547 *7.98*	537 *7.84*	510 *7.44*
		F	9.9+111R *56.5+634R*	12.0+80R *68.5+457R*	14.8+61R *84.5+348R*	16.9+48R *96.5+274R*	19.0+39R *108.5+223R*	21.9+33R *125.1+188R*	23.8+28R *135.9+160R*	25.8+24R *147.3+137R*	28.7+21R *163.9+120R*
	VSC @ 12"	q	910 *13.28*	807 *11.78*	739 *10.78*	692 *10.10*	658 *9.60*	632 *9.22*	612 *8.93*	596 *8.70*	584 *8.52*
		F	9.5+111R *54.2+634R*	11.6+80R *66.2+457R*	13.6+61R *77.7+348R*	15.7+48R *89.6+274R*	17.7+39R *101.1+223R*	19.6+33R *111.9+188R*	21.6+28R *123.3+160R*	23.5+24R *134.2+137R*	25.3+21R *144.5+120R*
	VSC @ 8"	q	994 *14.51*	906 *13.22*	824 *12.03*	789 *11.51*	745 *10.87*	729 *10.64*	701 *10.23*	694 *10.13*	675 *9.85*
		F	8.9+111R *50.8+634R*	10.6+80R *60.5+457R*	12.5+61R *71.4+348R*	14.0+48R *79.9+274R*	15.9+39R *90.8+223R*	17.3+33R *98.8+188R*	19.1+28R *109.1+160R*	20.5+24R *117.1+137R*	22.2+21R *126.8+120R*
	VSC @ 6"	q	1064 *15.53*	962 *14.04*	896 *13.08*	851 *12.42*	818 *11.94*	794 *11.59*	776 *11.32*	762 *11.12*	688 *10.04*
		F	8.4+111R *48.0+634R*	10.1+80R *57.7+457R*	11.7+61R *66.8+348R*	13.2+48R *75.4+274R*	14.7+39R *83.9+223R*	16.1+33R *91.9+188R*	17.5+28R *99.9+160R*	18.9+24R *107.9+137R*	20.2+21R *115.3+120R*
	VSC @ 4"	q	1181 *17.24*	1081 *15.78*	1016 *14.83*	972 *14.19*	941 *13.73*	918 *13.40*	902 *13.16*	818 *11.94*	688 *10.04*
		F	7.8+111R *44.5+634R*	9.2+80R *52.5+457R*	10.5+61R *60.0+348R*	11.8+48R *67.4+274R*	13.0+39R *74.2+223R*	14.2+33R *81.1+188R*	15.4+28R *87.9+160R*	16.5+24R *94.2+137R*	17.6+21R *100.5+120R*

VSC = Verco Sidelap Connection

Type PLB™-36

- 4 Weld Pattern at Supports
- Sidelaps Connected with PunchLok® Tool
- Primer Painted or Galvanized

Allowable Diaphragm Shear Values, q (plf, *kN/m*) and Flexibility Factors, F ((in./lb)x10^6, (*mm/N*)*x10*^{6})

GAGE	SIDELAP ATTACH-MENT		SPAN (ft-in., *mm*) 4'-0" *1,220*	5'-0" *1,520*	6'-0" *1,830*	7'-0" *2,130*	8'-0" *2,440*	9'-0" *2,740*	10'-0" *3,050*	11'-0" *3,350*	12'-0" *3,660*
18	VSC @ 24"	q	1336 *19.50*	1187 *17.32*	1029 *15.02*	971 *14.17*	881 *12.86*	855 *12.48*	796 *11.62*	785 *11.46*	743 *10.84*
		F	6.8+63R *38.8+360R*	8.3+45R *47.4+257R*	10.2+34R *58.2+194R*	11.7+27R *66.8+154R*	13.8+22R *78.8+126R*	15.3+19R *87.4+108R*	17.5+16R *99.9+91R*	19.0+14R *108.5+80R*	21.2+12R *121.1+69R*
	VSC @ 18"	q	1421 *20.74*	1253 *18.29*	1089 *15.89*	1021 *14.90*	971 *14.17*	896 *13.08*	872 *12.73*	853 *12.45*	808 *11.79*
		F	6.5+63R *37.1+360R*	7.9+45R *45.1+257R*	9.8+34R *56.0+194R*	11.2+27R *64.0+154R*	12.7+22R *72.5+126R*	14.7+19R *83.9+108R*	16.2+16R *92.5+91R*	17.6+14R *100.5+80R*	19.7+12R *112.5+69R*
	VSC @ 12"	q	1493 *21.79*	1310 *19.12*	1191 *17.38*	1108 *16.17*	1047 *15.28*	1002 *14.62*	967 *14.11*	940 *13.72*	919 *13.41*
		F	6.2+63R *35.4+360R*	7.6+45R *43.4+257R*	9.1+34R *52.0+194R*	10.5+27R *60.0+154R*	11.9+22R *68.0+126R*	13.3+19R *75.9+108R*	14.7+16R *83.9+91R*	16.1+14R *91.9+80R*	17.5+12R *99.9+69R*
	VSC @ 8"	q	1614 *23.55*	1455 *21.23*	1315 *19.19*	1250 *18.24*	1175 *17.15*	1145 *16.71*	1099 *16.04*	1084 *15.82*	1053 *15.37*
		F	5.9+63R *33.7+360R*	7.1+45R *40.5+257R*	8.4+34R *48.0+194R*	9.5+27R *54.2+154R*	10.8+22R *61.7+126R*	11.9+19R *68.0+108R*	13.2+16R *75.4+91R*	14.2+14R *81.1+80R*	15.5+12R *88.5+69R*
	VSC @ 6"	q	1716 *25.04*	1536 *22.42*	1420 *20.72*	1340 *19.56*	1283 *18.72*	1241 *18.11*	1210 *17.66*	1185 *17.29*	1057 *15.43*
		F	5.7+63R *32.5+360R*	6.8+45R *38.8+257R*	7.9+34R *45.1+194R*	9.0+27R *51.4+154R*	10.0+22R *57.1+126R*	11.1+19R *63.4+108R*	12.1+16R *69.1+91R*	13.2+14R *75.4+80R*	14.2+12R *81.1+69R*
	VSC @ 4"	q	1887 *27.54*	1710 *24.96*	1596 *23.29*	1519 *22.17*	1464 *21.37*	1425 *20.80*	1395 *20.36*	1257 *18.34*	1057 *15.43*
		F	5.3+63R *30.3+360R*	6.3+45R *36.0+257R*	7.2+34R *41.1+194R*	8.1+27R *46.3+154R*	9.0+22R *51.4+126R*	9.9+19R *56.5+108R*	10.8+16R *61.7+91R*	11.6+14R *66.2+80R*	12.4+12R *70.8+69R*
16	VSC @ 24"	q	1831 *26.72*	1618 *23.61*	1400 *20.43*	1316 *19.21*	1193 *17.41*	1155 *16.86*	1075 *15.69*	1058 *15.44*	1001 *14.61*
		F	4.8+40R *27.4+228R*	5.9+29R *33.7+166R*	7.2+22R *41.1+126R*	8.4+17R *48.0+97R*	9.9+14R *56.5+80R*	11.0+12R *62.8+69R*	12.6+10R *71.9+57R*	13.7+9R *78.2+51R*	15.4+8R *87.9+46R*
	VSC @ 18"	q	1940 *28.31*	1701 *24.82*	1478 *21.57*	1380 *20.14*	1309 *19.10*	1208 *17.63*	1173 *17.12*	1146 *16.72*	1086 *15.85*
		F	4.6+40R *26.3+228R*	5.6+29R *32.0+166R*	6.9+22R *39.4+126R*	8.0+17R *45.7+97R*	9.1+14R *52.0+80R*	10.6+12R *60.5+69R*	11.7+10R *66.8+57R*	12.8+9R *73.1+51R*	14.3+8R *81.7+46R*
	VSC @ 12"	q	2032 *29.65*	1775 *25.90*	1608 *23.47*	1492 *21.77*	1408 *20.55*	1345 *19.63*	1297 *18.93*	1259 *18.37*	1230 *17.95*
		F	4.5+40R *25.7+228R*	5.5+29R *31.4+166R*	6.5+22R *37.1+126R*	7.5+17R *42.8+97R*	8.6+14R *49.1+80R*	9.6+12R *54.8+69R*	10.7+10R *61.1+57R*	11.7+9R *66.8+51R*	12.8+8R *73.1+46R*
	VSC @ 8"	q	2186 *31.90*	1960 *28.60*	1768 *25.80*	1675 *24.44*	1573 *22.96*	1529 *22.31*	1467 *21.41*	1446 *21.10*	1405 *20.50*
		F	4.2+40R *24.0+228R*	5.1+29R *29.1+166R*	6.0+22R *34.3+126R*	6.9+17R *39.4+97R*	7.8+14R *44.5+80R*	8.6+12R *49.1+69R*	9.6+10R *54.8+57R*	10.4+9R *59.4+51R*	11.4+8R *65.1+46R*
	VSC @ 6"	q	2316 *33.80*	2064 *30.12*	1902 *27.76*	1791 *26.14*	1712 *24.98*	1654 *24.14*	1611 *23.51*	1578 *23.03*	1478 *21.57*
		F	4.1+40R *23.4+228R*	4.9+29R *28.0+166R*	5.7+22R *32.5+126R*	6.5+17R *37.1+97R*	7.3+14R *41.7+80R*	8.1+12R *46.3+69R*	8.9+10R *50.8+57R*	9.7+9R *55.4+51R*	10.4+8R *59.4+46R*
	VSC @ 4"	q	2533 *36.97*	2286 *33.36*	2128 *31.06*	2021 *29.49*	1945 *28.39*	1891 *27.60*	1851 *27.01*	1759 *25.67*	1478 *21.57*
		F	3.9+40R *22.3+228R*	4.6+29R *26.3+166R*	5.2+22R *29.7+126R*	5.9+17R *33.7+97R*	6.6+14R *37.7+80R*	7.3+12R *41.7+69R*	7.9+10R *45.1+57R*	8.5+9R *48.5+51R*	9.2+8R *52.5+46R*

VSC = Verco Sidelap Connection

Type PLB™-36

- **5 Weld Pattern at Supports**
- **Sidelaps Connected with PunchLok® Tool**
- **Primer Painted or Galvanized**

Allowable Diaphragm Shear Values, q (plf, *kN/m*) and Flexibility Factors, F ((in./lb)x10^6, (*mm/N*)*x10*^{6})

GAGE	SIDELAP ATTACH-MENT		SPAN (ft-in., *mm*)								
			4'-0" *1,220*	5'-0" *1,520*	6'-0" *1,830*	7'-0" *2,130*	8'-0" *2,440*	9'-0" *2,740*	10'-0" *3,050*	11'-0" *3,350*	12'-0" *3,660*
22	VSC @ 24"	q	676 *9.87*	604 *8.81*	524 *7.65*	497 *7.25*	451 *6.58*	439 *6.41*	409 *5.97*		
		F	9.9+78R *56.5+445R*	11.9+56R *68.0+320R*	14.5+42R *82.8+240R*	16.5+34R *94.2+194R*	19.3+28R *110.2+160R*	21.2+23R *121.1+131R*	24.2+20R *138.2+114R*		
	VSC @ 18"	q	722 *10.54*	639 *9.33*	557 *8.13*	523 *7.63*	499 *7.28*	461 *6.73*	449 *6.55*		
		F	9.4+78R *53.7+445R*	11.4+56R *65.1+320R*	13.8+42R *78.8+240R*	15.8+34R *90.2+194R*	17.7+28R *101.1+160R*	20.4+23R *116.5+131R*	22.2+20R *126.8+114R*		
	VSC @ 12"	q	761 *11.11*	670 *9.78*	611 *8.92*	570 *8.32*	540 *7.88*	517 *7.55*	500 *7.30*		
		F	9.1+78R *52.0+445R*	11.0+56R *62.8+320R*	12.9+42R *73.7+240R*	14.7+34R *83.9+194R*	16.6+28R *94.8+160R*	18.4+23R *105.1+131R*	20.3+20R *115.9+114R*		
	VSC @ 8"	q	826 *12.05*	748 *10.92*	678 *9.89*	646 *9.43*	608 *8.87*	593 *8.65*	570 *8.32*		
		F	8.6+78R *49.1+445R*	10.1+56R *57.7+320R*	11.9+42R *68.0+240R*	13.3+34R *75.9+194R*	15.1+28R *86.2+160R*	16.4+23R *93.6+131R*	18.1+20R *103.4+114R*		
	VSC @ 6"	q	881 *12.86*	792 *11.56*	734 *10.71*	694 *10.13*	666 *9.72*	644 *9.40*	628 *9.16*		
		F	8.2+78R *46.8+445R*	9.7+56R *55.4+320R*	11.2+42R *64.0+240R*	12.6+34R *71.9+194R*	14.0+28R *79.9+160R*	15.3+23R *87.4+131R*	16.7+20R *95.4+114R*		
	VSC @ 4"	q	973 *14.20*	885 *12.92*	828 *12.08*	790 *11.53*	762 *11.12*	742 *10.83*	727 *10.61*		
		F	7.7+78R *44.0+445R*	9.0+56R *51.4+320R*	10.2+42R *58.2+240R*	11.4+34R *65.1+194R*	12.6+28R *71.9+160R*	13.7+23R *78.2+131R*	14.8+20R *84.5+114R*		
20	VSC @ 24"	q	1000 *14.59*	884 *12.90*	764 *11.15*	718 *10.48*	650 *9.49*	629 *9.18*	585 *8.54*	575 *8.39*	544 *7.94*
		F	7.6+54R *43.4+308R*	9.2+39R *52.5+223R*	11.2+29R *64.0+166R*	12.9+23R *73.7+131R*	15.1+19R *86.2+108R*	16.7+16R *95.4+91R*	19.1+14R *109.1+80R*	20.6+12R *117.6+69R*	23.1+10R *131.9+57R*
	VSC @ 18"	q	1060 *15.47*	930 *13.57*	807 *11.78*	754 *11.00*	715 *10.43*	658 *9.60*	639 *9.33*	623 *9.09*	590 *8.61*
		F	7.3+54R *41.7+308R*	8.8+39R *50.2+223R*	10.8+29R *61.7+166R*	12.4+23R *70.8+131R*	14.0+19R *79.9+108R*	16.1+16R *91.9+91R*	17.7+14R *101.1+80R*	19.2+12R *109.6+69R*	21.4+10R *122.2+57R*
	VSC @ 12"	q	1111 *16.21*	971 *14.17*	879 *12.83*	815 *11.89*	769 *11.22*	733 *10.70*	706 *10.30*	685 *10.00*	668 *9.75*
		F	7.0+54R *40.0+308R*	8.5+39R *48.5+223R*	10.1+29R *57.7+166R*	11.6+23R *66.2+131R*	13.1+19R *74.8+108R*	14.7+16R *83.9+91R*	16.2+14R *92.5+80R*	17.7+12R *101.1+69R*	19.2+10R *109.6+57R*
	VSC @ 8"	q	1197 *17.47*	1073 *15.66*	967 *14.11*	916 *13.37*	859 *12.54*	835 *12.19*	800 *11.68*	787 *11.49*	688 *10.04*
		F	6.7+ 54R *38.3+308R*	7.9+39R *45.1+223R*	9.4+29R *53.7+166R*	10.6+23R *60.5+131R*	12.0+19R *68.5+108R*	13.2+16R *75.4+91R*	14.6+14R *83.4+80R*	15.7+12R *89.6+69R*	17.1+10R *97.6+57R*
	VSC @ 6"	q	1269 *18.52*	1131 *16.51*	1042 *15.21*	980 *14.30*	936 *13.66*	903 *13.18*	878 *12.81*	818 *11.94*	688 *10.04*
		F	6.5+54R *37.1+308R*	7.7+39R *44.0+223R*	8.9+29R *50.8+166R*	10.0+23R *57.1+131R*	11.2+19R *64.0+108R*	12.4+16R *70.8+91R*	13.5+14R *77.1+80R*	14.6+12R *83.4+69R*	15.7+10R *89.6+57R*
	VSC @ 4"	q	1390 *20.29*	1254 *18.30*	1166 *17.02*	1107 *16.16*	1064 *15.53*	1033 *15.08*	990 *14.45*	818 *11.94*	688 *10.04*
		F	6.1+54R *34.8+308R*	7.1+39R *40.5+223R*	8.2+29R *46.8+166R*	9.2+23R *52.5+131R*	10.1+19R *57.7+108R*	11.1+16R *63.4+91R*	12.0+14R *68.5+80R*	12.9+12R *73.7+69R*	13.9+10R *79.4+57R*

VSC = Verco Sidelap Connection

Type PLB™-36

- 5 Weld Pattern at Supports
- Sidelaps Connected with PunchLok® Tool
- Primer Painted or Galvanized

Allowable Diaphragm Shear Values, q (plf, *kN/m*) and Flexibility Factors, F ((in./lb)x10^6, (*mm/N*)*x10*^{6})

GAGE	SIDELAP ATTACH-MENT		SPAN (ft-in., *mm*) 4'-0" *1,220*	5'-0" *1,520*	6'-0" *1,830*	7'-0" *2,130*	8'-0" *2,440*	9'-0" *2,740*	10'-0" *3,050*	11'-0" *3,350*	12'-0" *3,660*
18	VSC @ 24"	q	1667 *24.33*	1457 *21.26*	1256 *18.33*	1171 *17.09*	1058 *15.44*	1017 *14.84*	944 *13.78*	924 *13.48*	873 *12.74*
		F	5.0+31R *28.6 +177R*	6.0+22R *34.3+126R*	7.4+17R *42.3+97R*	8.5+13R *48.5+74R*	10.1+11R *57.7+63R*	11.2+9R *64.0+51R*	12.9+8R *73.7+46R*	14.0+7R *79.9+40R*	15.7+6R *89.6+34R*
	VSC @ 18"	q	1755 *25.61*	1525 *22.26*	1319 *19.25*	1223 *17.85*	1152 *16.81*	1060 *15.47*	1024 *14.94*	995 *14.52*	942 *13.75*
		F	4.8+31R *27.4 +177R*	5.8+22R *33.1+126R*	7.1+17R *40.5+97R*	8.2+13R *46.8+74R*	9.4+11R *53.7+63R*	10.8+9R *61.7+51R*	12.0+8R *68.5+46R*	13.1+7R *74.8+40R*	14.7+6R *83.9+34R*
	VSC @ 12"	q	1829 *26.69*	1584 *23.12*	1424 *20.78*	1313 *19.16*	1232 *17.98*	1171 *17.09*	1124 *16.40*	1087 *15.86*	1057 *15.43*
		F	4.7+31R *26.8 +177R*	5.7+22R *32.5+126R*	6.7+17R *38.3+97R*	7.8+13R *44.5+74R*	8.9+11R *50.8+63R*	10.0+9R *57.1+51R*	11.1+8R *63.4+46R*	12.2+7R *69.7+40R*	13.3+6R *75.9+34R*
	VSC @ 8"	q	1953 *28.50*	1733 *25.29*	1553 *22.66*	1461 *21.32*	1365 *19.92*	1320 *19.26*	1262 *18.42*	1238 *18.07*	1057 *15.43*
		F	4.5+31R *25.7 +177R*	5.3+22R *30.3+126R*	6.3+17R *36.0+97R*	7.2+13R *41.1+74R*	8.2+11R *46.8+63R*	9.0+9R *51.4+51R*	10.1+8R *57.7+46R*	10.9+7R *62.2+40R*	11.9+6R *68.0+34R*
	VSC @ 6"	q	2057 *30.02*	1817 *26.52*	1662 *24.26*	1555 *22.69*	1478 *21.57*	1421 *20.74*	1378 *20.11*	1257 *18.34*	1057 *15.43*
		F	4.4+31R *25.1 +177R*	5.2+22R *29.7+126R*	6.0+17R *34.3+97R*	6.9+13R *39.4+74R*	7.7+11R *44.0+63R*	8.5+9R *48.5+51R*	9.4+8R *53.7+46R*	10.2+7R *58.2+40R*	11.0+6R *62.8+34R*
	VSC @ 4"	q	2233 *32.59*	1996 *29.13*	1844 *26.91*	1740 *25.39*	1666 *24.31*	1612 *23.53*	1521 *22.20*	1257 *18.34*	1057 *15.43*
		F	4.2+31R *24.0 +177R*	4.9+22R *28.0+126R*	5.6+17R *32.0+97R*	6.3+13R *36.0+74R*	7.0+11R *40.0+63R*	7.7+9R *44.0+51R*	8.4+8R *48.0+46R*	9.1+7R *52.0+40R*	9.8+6R *56.0+34R*
16	VSC @ 24"	q	2284 *33.33*	1987 *29.00*	1711 *24.97*	1589 *23.19*	1435 *20.94*	1377 *20.10*	1278 *18.65*	1249 *18.23*	1179 *17.21*
		F	3.6+20R *20.6+114R*	4.3+14R *24.6+80R*	5.3+11R *30.3+63R*	6.1+8R *34.8+46R*	7.2+7R *41.1+40R*	8.1+6R *46.3+34R*	9.3+5R *53.1+29R*	10.2+4R *58.2+23R*	11.5+4R *65.7+23R*
	VSC @ 18"	q	2396 *34.97*	2073 *30.25*	1792 *26.15*	1656 *24.17*	1557 *22.72*	1432 *20.90*	1381 *20.15*	1341 *19.57*	1269 *18.52*
		F	3.5+20R *20.0+114R*	4.2+14R *24.0+80R*	5.1+11R *29.1+63R*	5.9+8R *33.7+46R*	6.8+7R *38.8+40R*	7.9+6R *45.1+34R*	8.7+5R *49.7+29R*	9.6+4R *54.8+23R*	10.8+4R *61.7+23R*
	VSC @ 12"	q	2490 *36.34*	2149 *31.36*	1927 *28.12*	1772 *25.86*	1660 *24.23*	1576 *23.00*	1511 *22.05*	1461 *21.32*	1421 *20.74*
		F	3.4+20R *19.4+114R*	4.1+14R *23.4+80R*	4.9+11R *28.0+63R*	5.6+8R *32.0+46R*	6.4+7R *36.5+40R*	7.3+6R *41.7+34R*	8.1+5R *46.3+29R*	8.9+4R *50.8+23R*	9.8+4R *56.0+23R*
	VSC @ 8"	q	2648 *38.64*	2340 *34.15*	2092 *30.53*	1963 *28.65*	1832 *26.74*	1769 *25.82*	1690 *24.66*	1658 *24.20*	1478 *21.57*
		F	3.3+20R *18.8+114R*	3.9+14R *22.3+80R*	4.6+11R *26.3+63R*	5.2+8R *29.7+46R*	6.0+7R *34.3+40R*	6.6+6R *37.7+34R*	7.4+5R *42.3+29R*	8.0+4R *45.7+23R*	8.8+4R *50.2+23R*
	VSC @ 6"	q	2781 *40.59*	2447 *35.71*	2232 *32.57*	2084 *30.41*	1978 *28.87*	1900 *27.73*	1841 *26.87*	1759 *25.67*	1478 *21.57*
		F	3.2+20R *18.3+114R*	3.8+14R *21.7+80R*	4.4+11R *25.1+63R*	5.0+8R *28.6+46R*	5.6+7R *32.0+40R*	6.3+6R *36.0+34R*	6.9+5R *39.4+29R*	7.5+4R *42.8+23R*	8.1+4R *46.3+23R*
	VSC @ 4"	q	3005 *43.85*	2676 *39.05*	2466 *35.99*	2322 *33.89*	2221 *32.41*	2148 *31.35*	2094 *30.56*	1759 *25.67*	1478 *21.57*
		F	3.1+20R *17.7+114R*	3.6+14R *20.6+80R*	4.1+11R *23.4+63R*	4.6+8R *26.3+46R*	5.2+7R *29.7+40R*	5.7+6R *32.5+34R*	6.2+5R *35.4+29R*	6.7+4R *38.3+23R*	7.3+4R *41.7+23R*

VSC = Verco Sidelap Connection

Type PLB™-36

- **7 Weld Pattern at Supports**
- **Sidelaps Connected with PunchLok® Tool**
- **Primer Painted or Galvanized**

Allowable Diaphragm Shear Values, q (plf, *kN/m*) and Flexibility Factors, F ((in./lb)x10^6, (*mm/N*)*x10*^{6})

GAGE	SIDELAP ATTACH-MENT		SPAN (ft-in., *mm*)								
			4'-0" *1,220*	5'-0" *1,520*	6'-0" *1,830*	7'-0" *2,130*	8'-0" *2,440*	9'-0" *2,740*	10'-0" *3,050*	11'-0" *3,350*	12'-0" *3,660*
22	VSC @ 24"	q	792 *11.56*	707 *10.32*	620 *9.05*	592 *8.64*	544 *7.94*	535 *7.81*	505 *7.37*		
		F	8.1+22R *46.3+126R*	7.8+17R *44.5+97R*	9.2+15R *52.5+86R*	8.8+12R *50.2+69R*	10.0+11R *57.1+63R*	9.5+10R *54.2+57R*	10.5+9R *60.0+51R*		
	VSC @ 18"	q	836 *12.20*	743 *10.84*	655 *9.56*	621 *9.06*	599 *8.74*	561 *8.19*	554 *8.09*		
		F	6.5+22R *37.1+126R*	6.6+17R *37.7+97R*	7.7+15R *44.0+86R*	7.6+12R *43.4+69R*	7.6+11R *43.4+63R*	8.4+10R *48.0+57R*	8.2+9R *46.8+51R*		
	VSC @ 12"	q	873 *12.74*	774 *11.30*	713 *10.41*	673 *9.82*	646 *9.43*	628 *9.16*	616 *8.99*		
		F	5.6+22R *32.0+126R*	5.9+17R *33.7+97R*	6.1+15R *34.8+86R*	6.3+12R *36.0+69R*	6.4+11R *36.5+63R*	6.5+10R *37.1+57R*	6.5+9R *37.1+51R*		
	VSC @ 8"	q	936 *13.66*	853 *12.45*	784 *11.44*	757 *11.05*	724 *10.57*	718 *10.48*	701 *10.23*		
		F	4.7+22R *26.8+126R*	4.8+17R *27.4+97R*	5.0+15R *28.6+86R*	5.0+12R *28.6+69R*	5.1+11R *29.1+63R*	5.1+10R *29.1+57R*	5.2+9R *29.7+51R*		
	VSC @ 6"	q	988 *14.42*	898 *13.11*	844 *12.32*	811 *11.84*	790 *11.53*	778 *11.35*	753 *10.99*		
		F	4.3+22R *24.6+126R*	4.4+17R *25.1+97R*	4.5+15R *25.7+86R*	4.5+12R *25.7+69R*	4.5+11R *25.7+63R*	4.5+10R *25.7+57R*	4.6+9R *26.3+51R*		
	VSC @ 4"	q	1077 *15.72*	992 *14.48*	944 *13.78*	917 *13.38*	901 *13.15*	894 *13.05*	753 *10.99*		
		F	3.8+22R *21.7+126R*	3.9+17R *22.3+97R*	3.9+15R *22.3+86R*	3.9+12R *22.3+69R*	3.9+11R *22.3+63R*	3.9+10R *22.3+57R*	3.9+9R *22.3+51R*		
20	VSC @ 24"	q	1156 *16.87*	1025 *14.96*	897 *13.09*	852 *12.43*	782 *11.41*	766 *11.18*	722 *10.54*	721 *10.52*	688 *10.04*
		F	6.3+15R *36.0+86R*	6.2+12R *35.4+69R*	7.3+10R *41.7+57R*	7.0+9R *40.0+51R*	8.0+8R *45.7+46R*	7.6+7R *43.4+40R*	8.4+6R *48.0+34R*	8.1+6R *46.3+34R*	8.8+5R *50.2+29R*
	VSC @ 18"	q	1216 *17.75*	1074 *15.67*	944 *13.78*	892 *13.02*	857 *12.51*	802 *11.70*	789 *11.51*	782 *11.41*	688 *10.04*
		F	5.1+15R *29.1+86R*	5.3+12R *30.3+69R*	6.1+10R *34.8+57R*	6.1+9R *34.8+51R*	6.1+8R *34.8+46R*	6.7+7R *38.3+40R*	6.7+6R *38.3+34R*	6.6+6R *37.7+34R*	7.1+5R *40.5+29R*
	VSC @ 12"	q	1266 *18.48*	1117 *16.30*	1023 *14.93*	962 *14.04*	921 *13.44*	893 *13.03*	874 *12.76*	818 *11.94*	688 *10.04*
		F	4.5+15R *25.7+86R*	4.7+12R *26.8+69R*	4.9+10R *28.0+57R*	5.1+9R *29.1+51R*	5.2+8R *29.7+46R*	5.3+7R *30.3+40R*	5.3+6R *30.3+34R*	5.4+6R *30.8+34R*	5.4+5R *30.8+29R*
	VSC @ 8"	q	1351 *19.72*	1224 *17.86*	1120 *16.35*	1078 *15.73*	1028 *15.00*	1016 *14.83*	990 *14.45*	818 *11.94*	688 *10.04*
		F	3.8+15R *21.7+86R*	3.9+12R *22.3+69R*	4.1+10R *23.4+57R*	4.1+9R *23.4+51R*	4.2+8R *24.0+46R*	4.2+7R *24.0+40R*	4.3+6R *24.6+34R*	4.2+6R *24.0+34R*	4.3+5R *24.6+29R*
	VSC @ 6"	q	1422 *20.75*	1284 *18.74*	1202 *17.54*	1150 *16.78*	1119 *16.33*	1099 *16.04*	990 *14.45*	818 *11.94*	688 *10.04*
		F	3.5+15R *20.0+86R*	3.6+12R *20.6+69R*	3.6+10R *20.6+57R*	3.7+9R *21.1+51R*	3.7+8R *21.1+46R*	3.7+7R *21.1+40R*	3.8+6R *21.7+34R*	3.8+6R *21.7+34R*	3.8+5R *21.7+29R*
	VSC @ 4"	q	1542 *22.50*	1413 *20.62*	1338 *19.53*	1295 *18.90*	1270 *18.53*	1223 *17.85*	990 *14.45*	818 *11.94*	688 *10.04*
		F	3.1+15R *17.7+86R*	3.2+12R *18.3+69R*	3.2+10R *18.3+57R*	3.2+9R *18.3+51R*	3.2+8R *18.3+46R*	3.2+7R *18.3+40R*	3.2+6R *18.3+34R*	3.2+6R *18.3+34R*	3.2+5R *18.3+29R*

VSC = Verco Sidelap Connection

Type PLB™-36

- 7 Weld Pattern at Supports
- Sidelaps Connected with PunchLok® Tool
- Primer Painted or Galvanized

Allowable Diaphragm Shear Values, q (plf, *kN/m*) and Flexibility Factors, F ((in./lb)x10^6, (*mm/N*)*x10*^{6})

GAGE	SIDELAP ATTACH-MENT		SPAN (ft-in., *mm*) 4'-0" *1,220*	5'-0" *1,520*	6'-0" *1,830*	7'-0" *2,130*	8'-0" *2,440*	9'-0" *2,740*	10'-0" *3,050*	11'-0" *3,350*	12'-0" *3,660*
18	VSC @ 24"	q	1871 *27.31*	1651 *24.09*	1443 *21.06*	1364 *19.91*	1252 *18.27*	1224 *17.86*	1154 *16.84*	1150 *16.78*	1057 *15.43*
		F	4.3+9R *24.6+51R*	4.3+7R *24.6+40R*	5.0+6R *28.6+34R*	4.9+5R *28.0+29R*	5.5+4R *31.4+23R*	5.3+4R *30.3+23R*	5.9+3R *33.7+17R*	5.7+3R *32.5+17R*	6.2+3R *35.4+17R*
	VSC @ 18"	q	1961 *28.62*	1724 *25.16*	1515 *22.11*	1427 *20.83*	1368 *19.96*	1279 *18.67*	1258 *18.36*	1245 *18.17*	1057 *15.43*
		F	3.6+9R *20.6+51R*	3.7+7R *21.1+40R*	4.3+6R *24.6+34R*	4.3+5R *24.6+29R*	4.3+4R *24.6+23R*	4.7+4R *26.8+23R*	4.7+3R *26.8+17R*	4.7+3R *26.8+17R*	5.0+3R *28.6+17R*
	VSC @ 12"	q	2038 *29.74*	1789 *26.11*	1635 *23.86*	1534 *22.39*	1466 *21.39*	1420 *20.72*	1389 *20.27*	1257 *18.34*	1057 *15.43*
		F	3.2+9R *18.3+51R*	3.3+7R *18.8+40R*	3.5+6R *20.0+34R*	3.6+5R *20.6+29R*	3.7+4R *21.1+23R*	3.7+4R *21.1+23R*	3.8+3R *21.7+17R*	3.8+3R *21.7+17R*	3.9+3R *22.3+17R*
	VSC @ 8"	q	2166 *31.61*	1952 *28.49*	1783 *26.02*	1711 *24.97*	1631 *23.80*	1610 *23.50*	1521 *22.20*	1257 *18.34*	1057 *15.43*
		F	2.7+9R *15.4+51R*	2.8+7R *16.0+40R*	2.9+6R *16.6+34R*	2.9+5R *16.6+29R*	3.0+4R *17.1+23R*	3.0+4R *17.1+23R*	3.1+3R *17.7+17R*	3.1+3R *17.7+17R*	3.1+3R *17.7+17R*
	VSC @ 6"	q	2274 *33.19*	2044 *29.83*	1907 *27.83*	1822 *26.59*	1770 *25.83*	1738 *25.36*	1521 *22.20*	1257 *18.34*	1057 *15.43*
		F	2.5+9R *14.3+51R*	2.6+7R *14.8+40R*	2.6+6R *14.8+34R*	2.7+5R *15.4+29R*	2.7+4R *15.4+23R*	2.7+4R *15.4+23R*	2.7+3R *15.4+17R*	2.7+3R *15.4+17R*	2.8+3R *16.0+17R*
	VSC @ 4"	q	2455 *35.83*	2240 *32.69*	2116 *30.88*	2044 *29.83*	2002 *29.22*	1878 *27.41*	1521 *22.20*	1257 *18.34*	1057 *15.43*
		F	2.3+9R *13.1+51R*	2.3+7R *13.1+40R*	2.3+6R *13.1+34R*	2.3+5R *13.1+29R*	2.4+4R *13.7+23R*	2.4+4R *13.7+23R*	2.4+3R *13.7+17R*	2.4+3R *13.7+17R*	2.4+3R *13.7+17R*
16	VSC @ 24"	q	2524 *36.84*	2227 *32.50*	1948 *28.43*	1843 *26.90*	1692 *24.69*	1657 *24.18*	1564 *22.82*	1561 *22.78*	1478 *21.57*
		F	3.2+5R *18.3+29R*	3.2+4R *18.3+23R*	3.7+4R *21.1+23R*	3.7+3R *21.1+17R*	4.1+3R *23.4+17R*	4.0+2R *22.8+11R*	4.4+2R *25.1+11R*	4.3+2R *24.6+11R*	4.7+2R *26.8+11R*
	VSC @ 18"	q	2645 *38.60*	2325 *33.93*	2044 *29.83*	1926 *28.11*	1849 *26.98*	1731 *25.26*	1704 *24.87*	1690 *24.66*	1478 *21.57*
		F	2.7+5R *15.4+29R*	2.8+4R *16.0+23R*	3.2+4R *18.3+23R*	3.2+3R *18.3+17R*	3.2+3R *18.3+17R*	3.6+2R *20.6+11R*	3.6+2R *20.6+11R*	3.6+2R *20.6+11R*	3.8+2R *21.7+11R*
	VSC @ 12"	q	2746 *40.07*	2412 *35.20*	2205 *32.18*	2071 *30.22*	1982 *28.93*	1922 *28.05*	1882 *27.47*	1759 *25.67*	1478 *21.57*
		F	2.4+5R *13.7+29R*	2.5+4R *14.3+23R*	2.6+4R *14.8+23R*	2.7+3R *15.4+17R*	2.8+3R *16.0+17R*	2.8+2R *16.0+11R*	2.9+2R *16.6+11R*	2.9+2R *16.6+11R*	3.0+2R *17.1+11R*
	VSC @ 8"	q	2917 *42.57*	2630 *38.38*	2403 *35.07*	2308 *33.68*	2203 *32.15*	2178 *31.79*	2126 *31.03*	1759 *25.67*	1478 *21.57*
		F	2.1+5R *12.0+29R*	2.1+4R *12.0+23R*	2.2+4R *12.6+23R*	2.2+3R *12.6+17R*	2.3+3R *13.1+17R*	2.3+2R *13.1+11R*	2.4+2R *13.7+11R*	2.4+2R *13.7+11R*	2.4+2R *13.7+11R*
	VSC @ 6"	q	3060 *44.66*	2752 *40.16*	2570 *37.51*	2458 *35.87*	2391 *34.89*	2351 *34.31*	2129 *31.07*	1759 *25.67*	1478 *21.57*
		F	1.9+5R *10.8+29R*	2.0+4R *11.4+23R*	2.0+4R *11.4+23R*	2.1+3R *12.0+17R*	2.1+3R *12.0+17R*	2.1+2R *12.0+11R*	2.1+2R *12.0+11R*	2.1+2R *12.0+11R*	2.1+2R *12.0+11R*
	VSC @ 4"	q	3301 *48.17*	3013 *43.97*	2849 *41.58*	2755 *40.21*	2704 *39.46*	2628 *38.35*	2129 *31.07*	1759 *25.67*	1478 *21.57*
		F	1.8+5R *10.3+29R*	1.8+4R *10.3+23R*	1.8+4R *10.3+23R*	1.8+3R *10.3+17R*	1.8+3R *10.3+17R*	1.9+2R *10.8+11R*	1.9+2R *10.8+11R*	1.9+2R *10.8+11R*	1.9+2R *10.8+11R*

VSC = Verco Sidelap Connection

Type HSB®-36

- **4 Weld Pattern at Supports**
- **Button Punch or 1½" Top Seam Weld**
- **Primer Painted or Galvanized**

Allowable Diaphragm Shear Values, q (plf, *kN/m*) and Flexibility Factors, F ((in./lb)x10^6, (*mm/N*)*x10*^{6})

GAGE	SIDELAP ATTACH-MENT		SPAN (ft-in., *mm*) 4'-0" *1,220*	5'-0" *1,520*	6'-0" *1,830*	7'-0" *2,130*	8'-0" *2,440*	9'-0" *2,740*	10'-0" *3,050*	11'-0" *3,350*	12'-0" *3,660*
22	BP @ 24"	q	303 *4.42*	308 *4.49*	289 *4.22*	291 *4.25*	277 *4.04*	262 *3.82*	232 *3.39*		
		F	4.7+281R *26.8+1605R*	5.7+224R *32.5+1279R*	7.2+187R *41.1+1068R*	8.8+160R *50.2+914R*	11.0+140R *62.8+799R*	13.2+125R *75.4+714R*	16.2+112R *92.5+640R*		
	BP @ 12"	q	363 *5.30*	356 *5.20*	349 *5.09*	343 *5.01*	336 *4.90*	312 *4.55*	284 *4.14*		
		F	4.4+281R *25.1+1605R*	5.3+224R *30.3+1279R*	6.5+187R *37.1+1068R*	7.9+160R *45.1+914R*	9.6+140R *54.8+799R*	11.5+125R *65.7+714R*	13.8+112R *78.8+640R*		
	TSW @ 24"	q	567 *8.27*	519 *7.57*	434 *6.33*	417 *6.09*	366 *5.34*	359 *5.24*	325 *4.74*		
		F	38.7+159R *221.0+908R*	32.6+127R *186.2+725R*	42.6+106R *243.3+605R*	37.1+91R *211.8+520R*	45.3+80R *258.7+457R*	40.3+71R *230.1+405R*	47.3+64R *270.1+365R*		
	TSW @ 18"	q	646 *9.43*	577 *8.42*	484 *7.06*	456 *6.65*	435 *6.35*	389 *5.68*	378 *5.52*		
		F	23.8+159R *135.9+908R*	22.9+127R *130.8+725R*	29.6+106R *169.0+605R*	27.8+91R *158.7+520R*	26.7+80R *152.5+457R*	31.6+71R *180.4+405R*	30.1+64R *171.9+365R*		
	TSW @ 12"	q	718 *10.48*	632 *9.22*	573 *8.36*	531 *7.75*	498 *7.27*	472 *6.89*	451 *6.58*		
		F	17.0+159R *97.1+908R*	17.5+127R *99.9+725R*	17.9+106R *102.2+605R*	18.2+91R *103.9+520R*	18.4+80R *105.1+457R*	18.6+71R *106.2+405R*	18.8+64R *107.4+365R*		
	TSW @ 6"	q	971 *14.17*	874 *12.76*	807 *11.78*	757 *11.05*	719 *10.49*	689 *10.06*	665 *9.70*		
		F	8.0+159R *45.7+908R*	8.1+127R *46.3+725R*	8.2+106R *46.8+605R*	8.2+91R *46.8+520R*	8.2+80R *46.8+457R*	8.2+71R *46.8+405R*	8.2+64R *46.8+365R*		
20	BP @ 24"	q	457 *6.67*	459 *6.70*	434 *6.33*	418 *6.10*	359 *5.24*	327 *4.77*	290 *4.23*	269 *3.93*	244 *3.56*
		F	4.3+162R *24.6+925R*	5.4+130R *30.8+742R*	7.0+108R *40.0+617R*	8.7+93R *49.7+531R*	11.0+81R *62.8+463R*	13.4+72R *76.5+411R*	16.5+65R *94.2+371R*	19.6+59R *111.9+337R*	23.7+54R *135.3+308R*
	BP @ 12"	q	528 *7.71*	517 *7.55*	506 *7.38*	478 *6.98*	421 *6.14*	378 *5.52*	343 *5.01*	314 *4.58*	290 *4.23*
		F	4.0+162R *22.8+925R*	5.0+130R *28.6+742R*	6.3+108R *36.0+617R*	7.9+93R *45.1+531R*	9.7+81R *55.4+463R*	11.9+72R *68.0+411R*	14.4+65R *82.2+371R*	17.2+59R *98.2+337R*	20.3+54R *115.9+308R*
	TSW @ 24"	q	794 *11.59*	710 *10.36*	595 *8.68*	561 *8.19*	493 *7.19*	477 *6.96*	432 *6.30*	424 *6.19*	390 *5.69*
		F	30.5+88R *174.2+502R*	26.4+70R *150.7+400R*	34.5+59R *197.0+337R*	30.6+50R *174.7+286R*	37.5+44R *214.1+251R*	33.8+39R *193.0+223R*	39.8+35R *227.3+200R*	36.4+32R *207.8+183R*	41.8+29R *238.7+166R*
	TSW @ 18"	q	884 *12.90*	777 *11.34*	651 *9.50*	607 *8.86*	573 *8.36*	512 *7.47*	494 *7.21*	478 *6.98*	441 *6.44*
		F	19.2+88R *109.6+502R*	18.8+70R *107.4+400R*	24.4+59R *139.3+337R*	23.2+50R *132.5+286R*	22.5+44R *128.5+251R*	26.8+39R *153.0+223R*	25.7+35R *146.8+200R*	25.0+32R *142.8+183R*	28.5+29R *162.7+166R*
	TSW @ 12"	q	967 *14.11*	840 *12.26*	755 *11.02*	693 *10.11*	646 *9.43*	609 *8.89*	579 *8.45*	554 *8.09*	534 *7.79*
		F	13.9+88R *79.4+502R*	14.5+70R *82.8+400R*	15.0+59R *85.7+337R*	15.4+50R *87.9+286R*	15.8+44R *90.2+251R*	16.1+39R *91.9+223R*	16.3+35R *93.1+200R*	16.5+32R *94.2+183R*	16.7+29R *95.4+166R*
	TSW @ 6"	q	1258 *18.36*	1119 *16.33*	1024 *14.94*	954 *13.92*	902 *13.16*	860 *12.55*	826 *12.05*	798 *11.65*	688 *10.04*
		F	6.8+88R *38.8+502R*	6.9+70R *39.4+400R*	7.0+59R *40.0+337R*	7.1+50R *40.5+286R*	7.1+44R *40.5+251R*	7.2+39R *41.1+223R*	7.2+35R *41.1+200R*	7.3+32R *41.7+183R*	7.3+29R *41.7+166R*

BP = Button Punch; TSW = Top Seam Weld

Type HSB®-36

- 4 Weld Pattern at Supports
- Button Punch or 1½" Top Seam Weld
- Primer Painted or Galvanized

Allowable Diaphragm Shear Values, q (plf, *kN/m*) and Flexibility Factors, F ((in./lb)x10^6, (*mm/N*)*x10*^{6})

GAGE	SIDELAP ATTACH-MENT		SPAN (ft-in., *mm*) 4'-0" *1,220*	5'-0" *1,520*	6'-0" *1,830*	7'-0" *2,130*	8'-0" *2,440*	9'-0" *2,740*	10'-0" *3,050*	11'-0" *3,350*	12'-0" *3,660*
18	BP @ 24"	q	883 *12.89*	820 *11.97*	671 *9.79*	586 *8.55*	506 *7.38*	458 *6.68*	408 *5.95*	376 *5.49*	342 *4.99*
		F	3.8+69R *21.7+394R*	5.0+55R *28.6+314R*	6.7+46R *38.3+263R*	8.6+39R *49.1+223R*	11.0+34R *62.8+194R*	13.6+31R *77.7+177R*	16.9+27R *96.5+154R*	20.3+25R *115.9+143R*	24.6+23R *140.5+131R*
	BP @ 12"	q	978 *14.27*	891 *13.00*	747 *10.90*	644 *9.40*	567 *8.27*	507 *7.40*	459 *6.70*	420 *6.13*	387 *5.65*
		F	3.6+69R *20.6+394R*	4.8+55R *27.4+314R*	6.2+46R *35.4+263R*	7.9+39R *45.1+223R*	10.0+34R *57.1+194R*	12.4+31R *70.8+177R*	15.2+27R *86.8+154R*	18.4+25R *105.1+143R*	21.9+23R *125.1+131R*
	TSW @ 24"	q	1253 *18.29*	1092 *15.94*	914 *13.34*	845 *12.33*	743 *10.84*	707 *10.32*	639 *9.33*	619 *9.03*	571 *8.33*
		F	20.2+35R *115.3+200R*	18.0+28R *102.8+160R*	23.6+23R *134.8+131R*	21.5+20R *122.8+114R*	26.4+17R *150.7+97R*	24.3+15R *138.8+86R*	28.8+14R *164.5+80R*	26.8+13R *153.0+74R*	30.8+12R *175.9+69R*
	TSW @ 18"	q	1359 *19.83*	1170 *17.07*	980 *14.30*	899 *13.12*	837 *12.22*	748 *10.92*	713 *10.41*	684 *9.98*	631 *9.21*
		F	13.1+35R *74.8+200R*	13.1+28R *74.8+160R*	17.0+23R *97.1+131R*	16.6+20R *94.8+114R*	16.3+17R *93.1+97R*	19.5+15R *111.3+86R*	19.0+14R *108.5+80R*	18.7+13R *106.8+74R*	21.5+12R *122.8+69R*
	TSW @ 12"	q	1455 *21.23*	1244 *18.15*	1102 *16.08*	1000 *14.59*	923 *13.47*	863 *12.59*	815 *11.89*	775 *11.31*	742 *10.83*
		F	9.7+35R *55.4+200R*	10.3+28R *58.8+160R*	10.8+23R *61.7+131R*	11.3+20R *64.5+114R*	11.7+17R *66.8+97R*	12.0+15R *68.5+86R*	12.3+14R *70.2+80R*	12.6+13R *71.9+74R*	12.9+12R *73.7+69R*
	TSW @ 6"	q	1796 *26.21*	1571 *22.93*	1419 *20.71*	1310 *19.12*	1227 *17.91*	1162 *16.96*	1110 *16.20*	1067 *15.57*	1031 *15.05*
		F	5.0+35R *28.6+200R*	5.1+28R *29.1+160R*	5.3+23R *30.3+131R*	5.4+20R *30.8+114R*	5.5+17R *31.4+97R*	5.6+15R *32.0+86R*	5.6+14R *32.0+80R*	5.7+13R *32.5+74R*	5.8+12R *33.1+69R*
16	BP @ 24"	q	1296 *18.91*	1056 *15.41*	868 *12.67*	755 *11.02*	654 *9.54*	589 *8.60*	526 *7.68*	483 *7.05*	440 *6.42*
		F	3.6+35R *20.6+200R*	4.8+28R *27.4+160R*	6.5+23R *37.1+131R*	8.5+20R *48.5+114R*	11.0+18R *62.8+103R*	13.7+16R *78.2+91R*	17.1+14R *97.6+80R*	20.7+13R *118.2+74R*	25.1+12R *143.3+69R*
	BP @ 12"	q	1399 *20.42*	1124 *16.40*	941 *13.73*	810 *11.82*	712 *10.39*	636 *9.28*	575 *8.39*	525 *7.66*	483 *7.05*
		F	3.4+35R *19.4+200R*	4.6+28R *26.3+160R*	6.1+23R *34.8+131R*	8.0+20R *45.7+114R*	10.2+18R *58.2+103R*	12.8+16R *73.1+91R*	15.8+14R *90.2+80R*	19.2+13R *109.6+74R*	23.0+12R *131.3+69R*
	TSW @ 24"	q	1667 *24.33*	1431 *20.88*	1198 *17.48*	1094 *15.97*	962 *14.04*	907 *13.24*	820 *11.97*	788 *11.50*	726 *10.60*
		F	14.2+17R *81.1+97R*	13.0+13R *74.2+74R*	17.1+11R *97.6+63R*	15.8+10R *90.2+57R*	19.5+8R *111.3+46R*	18.2+7R *103.9+40R*	21.6+7R *123.3+40R*	20.3+6R *115.9+34R*	23.5+6R *134.2+34R*
	TSW @ 18"	q	1781 *25.99*	1516 *22.12*	1270 *18.53*	1153 *16.83*	1065 *15.54*	952 *13.89*	901 *13.15*	860 *12.55*	793 *11.57*
		F	9.4+17R *53.7+97R*	9.6+13R *54.8+74R*	12.5+11R *71.4+63R*	12.3+10R *70.2+57R*	12.3+8R *70.2+46R*	14.7+7R *83.9+40R*	14.5+7R *82.8+40R*	14.4+6R *82.2+34R*	16.6+6R *94.8+34R*
	TSW @ 12"	q	1885 *27.51*	1596 *23.29*	1402 *20.46*	1263 *18.43*	1159 *16.91*	1077 *15.72*	1012 *14.77*	959 *14.00*	915 *13.35*
		F	7.1+17R *40.5+97R*	7.6+13R *43.4+74R*	8.1+11R *46.3+63R*	8.5+10R *48.5+57R*	8.9+8R *50.8+46R*	9.3+7R *53.1+40R*	9.6+7R *54.8+40R*	9.9+6R *56.5+34R*	10.2+6R *58.2+34R*
	TSW @ 6"	q	2252 *32.87*	1950 *28.46*	1746 *25.48*	1600 *23.35*	1490 *21.74*	1404 *20.49*	1335 *19.48*	1279 *18.67*	1233 *17.99*
		F	3.8+17R *21.7+97R*	3.9+13R *22.3+74R*	4.1+11R *23.4+63R*	4.2+10R *24.0+57R*	4.3+8R *24.6+46R*	4.4+7R *25.1+40R*	4.5+7R *25.7+40R*	4.6+6R *26.3+34R*	4.6+6R *26.3+34R*

BP = Button Punch; TSW = Top Seam Weld

Type HSB®-36

- **5 Weld Pattern at Supports**
- **Button Punch or 1½" Top Seam Weld**
- **Primer Painted or Galvanized**

Allowable Diaphragm Shear Values, q (plf, *kN/m*) and Flexibility Factors, F ((in./lb)x10^6, (*mm/N*)*x10*^{6})

GAGE	SIDELAP ATTACH-MENT		SPAN (ft-in., *mm*) 4'-0" *1,220*	5'-0" *1,520*	6'-0" *1,830*	7'-0" *2,130*	8'-0" *2,440*	9'-0" *2,740*	10'-0" *3,050*	11'-0" *3,350*	12'-0" *3,660*
22	BP @ 24"	q	451 *6.58*	445 *6.49*	416 *6.07*	407 *5.94*	351 *5.12*	319 *4.66*	284 *4.14*		
		F	4.5+157R *25.7+896R*	5.4+126R *30.8+719R*	6.9+105R *39.4+600R*	8.4+90R *48.0+514R*	10.6+79R *60.5+451R*	12.8+70R *73.1+400R*	15.8+63R *90.2+360R*		
	BP @ 12"	q	511 *7.46*	492 *7.18*	476 *6.95*	458 *6.68*	405 *5.91*	364 *5.31*	331 *4.83*		
		F	4.3+157R *24.6+896R*	5.2+126R *29.7+719R*	6.3+105R *36.0+600R*	7.8+90R *44.5+514R*	9.5+79R *52.4+451R*	11.6+70R *66.2+400R*	13.9+63R *79.4+360R*		
	TSW @ 24"	q	699 *10.20*	627 *9.15*	525 *7.66*	496 *7.24*	437 *6.38*	423 *6.17*	383 *5.59*		
		F	26.3+77R *150.2+440R*	22.8+62R *130.2+354R*	29.6+51R *169.0+291R*	26.4+44R *150.7+251R*	32.1+39R *183.3+223R*	29.1+34R *166.2+194R*	34.1+31R *194.7+177R*		
	TSW @ 18"	q	780 *11.38*	687 *10.03*	576 *8.41*	538 *7.85*	508 *7.41*	454 *6.63*	439 *6.41*		
		F	16.8+77R *95.9+440R*	16.5+62R *94.2+354R*	21.2+51R *121.1+291R*	20.2+44R *115.3+251R*	19.6+39R *111.9+223R*	23.2+34R *132.5+194R*	22.3+31R *127.3+177R*		
	TSW @ 12"	q	854 *12.46*	744 *10.86*	669 *9.76*	615 *8.98*	574 *8.38*	541 *7.90*	516 *7.53*		
		F	12.4+77R *70.8+440R*	12.9+62R *73.7+354R*	13.3+51R *75.9+291R*	13.7+44R *78.2+251R*	14.0+39R *79.9+223R*	14.2+34R *81.1+194R*	14.4+31R *82.2+177R*		
	TSW @ 6"	q	1115 *16.27*	993 *14.49*	910 *13.28*	850 *12.40*	804 *11.73*	768 *11.21*	738 *10.77*		
		F	6.5+77R *37.1+440R*	6.6+62R *37.7+354R*	6.7+51R *38.3+291R*	6.7+44R *38.3+251R*	6.8+39R *38.8+223R*	6.8+34R *38.8+194R*	6.9+31R *39.4+177R*		
20	BP @ 24"	q	690 *10.07*	675 *9.85*	590 *8.61*	516 *7.53*	447 *6.52*	405 *5.91*	361 *5.27*	334 *4.87*	304 *4.44*
		F	4.0+91R *22.8+520R*	5.1+73R *29.1+417R*	6.5+61R *37.1+348R*	8.2+52R *46.8+297R*	10.4+45R *59.4+257R*	12.8+40R *73.1+228R*	15.9+36R *90.8+206R*	19.0+33R *108.5+188R*	23.1+30R *131.9+171R*
	BP @ 12"	q	762 *11.12*	733 *10.70*	656 *9.57*	568 *8.29*	501 *7.31*	450 *6.57*	408 *5.95*	374 *5.46*	346 *5.05*
		F	3.9+91R *22.3+520R*	4.9+73R *28.0+417R*	6.1+61R *34.8+348R*	7.7+52R *44.0+297R*	9.5+45R *54.2.+257R*	11.7+40R *66.8+228R*	14.3+36R *81.7+206R*	17.2+33R *98.2+188R*	20.6+30R *117.6+171R*
	TSW @ 24"	q	991 *14.46*	872 *12.73*	730 *10.65*	679 *9.91*	598 *8.73*	572 *8.35*	518 *7.56*	504 *7.36*	465 *6.79*
		F	20.5+43R *117.1+246R*	18.2+34R *103.9+194R*	23.7+28R *135.3+160R*	21.5+24R *122.8+137R*	26.2+21R *149.6+120R*	24.1+19R *137.6+108R*	28.3+17R *161.6+97R*	26.3+16R *150.2+91R*	30.2+14R *172.4+80R*
	TSW @ 18"	q	1084 *15.82*	941 *13.73*	788 *11.50*	727 *10.61*	680 *9.92*	608 *8.87*	583 *8.51*	561 *8.19*	518 *7.56*
		F	13.4+43R *76.5+246R*	13.4+34R *76.5+194R*	17.2+28R *98.2+160R*	16.6+24R *94.8+137R*	16.3+21R *93.1+120R*	19.4+19R *110.8+108R*	18.8+17R *107.4+97R*	18.5+16R *105.6+91R*	21.1+14R *120.5+80R*
	TSW @ 12"	q	1169 *17.06*	1006 *14.68*	895 *13.06*	816 *11.91*	756 *11.03*	709 *10.35*	672 *9.81*	641 *9.35*	615 *8.98*
		F	10.0+43R *57.1+246R*	10.6+34R *60.5+194R*	11.0+28R *62.8+160R*	11.4+24R *65.1+137R*	11.8+21R *67.4+120R*	12.1+19R *69.1+108R*	12.4+17R *70.8+97R*	12.6+16R *71.9+91R*	12.8+14R *73.1+80R*
	TSW @ 6"	q	1469 *21.44*	1293 *18.87*	1174 *17.13*	1088 *15.88*	1023 *14.93*	972 *14.19*	931 *13.59*	818 *11.94*	688 *10.04*
		F	5.4+43R *30.8+246R*	5.5+34R *31.4+194R*	5.6+28R *32.0+160R*	5.7+24R *32.5+137R*	5.8+21R *33.1+120R*	5.9+19R *33.7+108R*	5.9+17R *33.7+97R*	6.0+16R *34.3+91R*	6.0+14R *34.3+80R*

BP = Button Punch; TSW = Top Seam Weld

Type HSB®-36

- 5 Weld Pattern at Supports
- Button Punch or 1½" Top Seam Weld
- Primer Painted or Galvanized

Allowable Diaphragm Shear Values, q (plf, *kN/m*) and Flexibility Factors, F ((in./lb)x10^6, (*mm/N*)*x10*^{6})

GAGE	SIDELAP ATTACH-MENT		SPAN (ft-in., *mm*) 4'-0" *1,220*	5'-0" *1,520*	6'-0" *1,830*	7'-0" *2,130*	8'-0" *2,440*	9'-0" *2,740*	10'-0" *3,050*	11'-0" *3,350*	12'-0" *3,660*
18	BP @ 24"	q	1264 *18.45*	1030 *15.03*	849 *12.39*	738 *10.77*	641 *9.35*	577 *8.42*	516 *7.53*	475 *6.93*	433 *6.32*
		F	3.5+39R *20.0+223R*	4.6+31R *26.3+177R*	6.1+26R *34.8+148R*	7.9+22R *45.1+126R*	10.2+19R *58.2+108R*	12.7+17R *72.5+97R*	15.9+15R *90.8+86R*	19.4+14R *110.8+80R*	23.6+13R *134.8+74R*
	BP @ 12"	q	1353 *19.75*	1089 *15.89*	914 *13.34*	788 *11.50*	694 *10.13*	621 *9.06*	562 *8.20*	514 *7.50*	475 *6.93*
		F	3.4+39R *19.4+223R*	4.5+31R *25.7+177R*	5.8+26R *33.1+148R*	7.5+22R *42.8+126R*	9.5+19R *54.2+108R*	12.0+17R *68.5+97R*	14.8+15R *84.5+86R*	18.0+14R *102.8+80R*	21.7+13R *123.9+74R*
	TSW @ 24"	q	1582 *23.09*	1359 *19.83*	1138 *16.61*	1040 *15.18*	914 *13.34*	862 *12.58*	780 *11.38*	750 *10.95*	691 *10.08*
		F	13.4+17R *76.5+97R*	12.3+13R *70.2+74R*	16.0+11R *91.4+63R*	14.9+10R *85.1+57R*	18.3+8R *104.5+46R*	17.1+7R *97.6+40R*	20.2+7R *115.3+40R*	19.1+6R *109.1+34R*	22.0+6R *125.6+34R*
	TSW @ 18"	q	1690 *24.66*	1440 *21.02*	1206 *17.60*	1096 *15.99*	1012 *14.77*	905 *13.21*	858 *12.52*	818 *11.94*	755 *11.02*
		F	9.0+17R *51.4+97R*	9.2+13R *52.5+74R*	11.9+11R *68.0+63R*	11.7+10R *66.8+57R*	11.7+8R *66.8+46R*	13.9+7R *79.4+40R*	13.8+7R *78.8+40R*	13.7+6R *78.2+34R*	15.7+6R *89.6+34R*
	TSW @ 12"	q	1790 *26.12*	1516 *22.12*	1333 *19.45*	1201 *17.53*	1102 *16.08*	1025 *14.96*	964 *14.07*	914 *13.34*	872 *12.73*
		F	6.9+17R *39.4+97R*	7.4+13R *42.3+74R*	7.8+11R *44.5+63R*	8.2+10R *46.8+57R*	8.6+8R *49.1+46R*	8.9+7R *50.8+40R*	9.2+7R *52.5+40R*	9.5+6R *54.2+34R*	9.8+6R *56.0+34R*
	TSW @ 6"	q	2140 *31.23*	1853 *27.04*	1661 *24.24*	1523 *22.23*	1419 *20.71*	1338 *19.53*	1273 *18.58*	1220 *17.80*	1057 *15.43*
		F	3.9+17R *22.3+97R*	4.1+13R *23.4+74R*	4.2+11R *24.0+63R*	4.3+10R *24.6+57R*	4.4+8R *25.1+46R*	4.5+7R *25.7+40R*	4.6+7R *26.3+40R*	4.7+6R *26.8+34R*	4.7+6R *26.8+34R*
16	BP @ 24"	q	1656 *24.17*	1343 *19.60*	1110 *16.20*	962 *14.04*	837 *12.22*	751 *10.96*	673 *9.82*	617 *9.00*	563 *8.22*
		F	3.2+20R *18.3+114R*	4.3+16R *24.6+91R*	5.9+13R *33.7+74R*	7.7+11R *44.0+63R*	10.0+10R *57.1+57R*	12.7+9R *72.5+51R*	16.0+8R *91.4+46R*	19.5+7R *111.3+40R*	23.9+7R *136.5+40R*
	BP @ 12"	q	1741 *25.41*	1400 *20.43*	1172 *17.10*	1010 *14.74*	888 *12.96*	793 *11.57*	717 *10.46*	655 *9.56*	603 *8.80*
		F	3.1+20R *17.7+114R*	4.2+16R *24.0+91R*	5.6+13R *32.0+74R*	7.4+11R *42.3+63R*	9.5+10R *54.2+57R*	12.1+9R *69.1+51R*	15.1+8R *86.2+46R*	18.5+7R *105.6+40R*	22.4+7R *127.9+40R*
	TSW @ 24"	q	2115 *30.87*	1794 *26.18*	1502 *21.92*	1358 *19.82*	1194 *17.43*	1117 *16.30*	1011 *14.75*	964 *14.07*	888 *12.96*
		F	9.5+8R *54.2+46R*	8.9+6R *50.8+34R*	11.6+5R *66.2+29R*	10.9+5R *62.2+29R*	13.5+4R *77.1+23R*	12.8+4R *73.1+23R*	15.2+3R *86.8+17R*	14.5+3R *82.8+17R*	16.7+3R *95.4+17R*
	TSW @ 18"	q	2232 *32.57*	1882 *27.47*	1576 *23.00*	1420 *20.72*	1302 *19.00*	1164 *16.99*	1096 *15.99*	1039 *15.16*	959 *14.00*
		F	6.5+8R *37.1+46R*	6.7+6R *38.3+34R*	8.7+5R *49.7+29R*	8.7+5R *49.7+29R*	8.8+4R *50.2+23R*	10.5+4R *60.0+23R*	10.5+3R *60.0+17R*	10.5+3R *60.0+17R*	12.1+3R *69.1+17R*
	TSW @ 12"	q	2339 *34.14*	1964 *28.66*	1713 *25.00*	1534 *22.39*	1400 *20.43*	1296 *18.91*	1212 *17.69*	1145 *16.71*	1088 *15.88*
		F	5.1+8R *29.1+46R*	5.5+6R *31.4+34R*	5.9+5R *33.7+29R*	6.2+5R *35.4+29R*	6.5+4R *37.1+23R*	6.8+4R *38.8+23R*	7.1+3R *40.5+17R*	7.4+3R *42.3+17R*	7.7+3R *44.0+17R*
	TSW @ 6"	q	2716 *39.64*	2329 *33.99*	2070 *30.21*	1884 *27.49*	1745 *25.47*	1638 *23.90*	1552 *22.65*	1482 *21.63*	1424 *20.78*
		F	3.0+8R *17.1+46R*	3.1+6R *17.7+34R*	3.2+5R *18.3+29R*	3.4+5R *19.4+29R*	3.5+4R *20.0+23R*	3.6+4R *20.6+23R*	3.6+3R *20.6+17R*	3.7+3R *21.1+17R*	3.8+3R *21.7+17R*

BP = Button Punch; TSW = Top Seam Weld

Type HSB®-36

- **7 Weld Pattern at Supports**
- **Button Punch or 1½" Top Seam Weld**
- **Primer Painted or Galvanized**

Allowable Diaphragm Shear Values, q (plf, *kN/m*) and Flexibility Factors, F ((in./lb)x10^6, (*mm/N*)*x10*^{6})

GAGE	SIDELAP ATTACH-MENT		SPAN (ft-in., *mm*) 4'-0" *1,220*	5'-0" *1,520*	6'-0" *1,830*	7'-0" *2,130*	8'-0" *2,440*	9'-0" *2,740*	10'-0" *3,050*	11'-0" *3,350*	12'-0" *3,660*
22	BP @ 24"	q	623 *9.09*	598 *8.73*	522 *7.62*	458 *6.68*	397 *5.79*	360 *5.25*	322 *4.70*		
		F	4.1+70R *23.4+400R*	4.9+56R *28.0+320R*	6.1+47R *34.8+268R*	7.5+40R *42.8+228R*	9.3+35R *53.1+200R*	11.3+31R *64.5+177R*	13.9+28R *79.4+160R*		
	BP @ 12"	q	683 *9.97*	646 *9.43*	579 *8.45*	502 *7.33*	445 *6.49*	400 *5.84*	364 *5.31*		
		F	4.0+70R *22.8+400R*	4.8+56R *27.4+320R*	5.8+47R *33.1+268R*	7.0+40R *40.0+228R*	8.6+35R *49.1+200R*	10.5+31R *60.0+177R*	12.7+28R *72.5+160R*		
	TSW @ 24"	q	731 *10.67*	720 *10.51*	595 *8.68*	600 *8.76*	521 *7.60*	529 *7.72*	474 *6.92*		
		F	12.2+6R *69.7+34R*	11.8+5R *67.4+29R*	16.0+4R *91.4+23R*	15.3+4R *87.4+23R*	19.4+3R *110.8+17R*	18.5+3R *105.6+17R*	22.6+3R *129.0+17R*		
	TSW @ 18"	q	907 *13.24*	851 *12.42*	704 *10.27*	689 *10.06*	667 *9.73*	597 *8.71*	578 *8.44*		
		F	8.4+6R *48.0+34R*	8.9+5R *50.8+29R*	11.8+4R *67.4+23R*	12.0+4R *68.5+23R*	12.3+3R *70.2+17R*	15.0+3R *85.7+17R*	15.1+3R *86.2+17R*		
	TSW @ 12"	q	1072 *15.64*	972 *14.19*	877 *12.80*	808 *11.79*	756 *11.03*	715 *10.43*	682 *9.95*		
		F	6.6+6R *37.7+34R*	7.3+5R *41.7+29R*	7.9+4R *45.1+23R*	8.5+4R *48.5+23R*	9.1+3R *52.0+17R*	9.6+3R *54.8+17R*	10.1+3R *57.7+17R*		
	TSW @ 6"	q	1464 *21.37*	1310 *19.12*	1204 *17.57*	1127 *16.45*	1068 *15.59*	929 *13.56*	753 *10.99*		
		F	4.2+6R *24.0+34R*	4.5+5R *25.7+29R*	4.7+4R *26.8+23R*	4.8+4R *27.4+23R*	5.0+3R *28.6+17R*	5.2+3R *29.7+17R*	5.3+3R *30.3+17R*		
20	BP @ 24"	q	962 *14.04*	804 *11.73*	663 *9.68*	578 *8.44*	502 *7.33*	454 *6.63*	406 *5.93*	375 *5.47*	342 *4.99*
		F	3.7+41R *21.1+234R*	4.5+32R *25.7+183R*	5.7+27R *32.5+154R*	7.1+23R *40.5+131R*	9.0+20R *51.4+114R*	11.1+18R *63.4+103R*	13.8+16R *78.8+91R*	16.7+15R *95.4+86R*	20.4+14R *116.5+80R*
	BP @ 12"	q	1034 *15.09*	854 *12.46*	719 *10.49*	622 *9.08*	549 *8.01*	493 *7.19*	448 *6.54*	411 *6.00*	380 *5.55*
		F	3.6+41R *20.6+234R*	4.4+32R *25.1+183R*	5.4+27R *30.8+154R*	6.8+23R *38.8+131R*	8.5+20R *48.5+114R*	10.4+18R *59.4+103R*	12.8+16R *73.1+91R*	15.5+15R *88.5+86R*	18.6+14R *106.2+80R*
	TSW @ 24"	q	999 *14.58*	969 *14.14*	800 *11.68*	796 *11.62*	691 *10.08*	695 *10.14*	621 *9.06*	629 *9.18*	573 *8.36*
		F	9.8+4R *56.0+23R*	9.5+3R *54.2+17R*	13.0+3R *74.2+17R*	12.5+2R *71.4+11R*	16.0+2R *91.4+11R*	15.4+2R *87.9+11R*	18.8+2R *107.4+11R*	18.2+2R *103.9+11R*	21.5+1R *122.8+6R*
	TSW @ 18"	q	1224 *17.86*	1134 *16.55*	937 *13.67*	908 *13.25*	882 *12.87*	779 *11.37*	769 *11.22*	757 *11.05*	688 *10.04*
		F	6.8+4R *38.8+23R*	7.3+3R *41.7+17R*	9.6+3R *54.8+17R*	9.9+2R *56.5+11R*	10.2+2R *58.2+11R*	12.5+2R *71.4+11R*	12.7+2R *72.5+11R*	12.9+2R *73.7+11R*	15.1+1R *86.2+6R*
	TSW @ 12"	q	1431 *20.88*	1292 *18.86*	1189 *17.35*	1091 *15.92*	1016 *14.83*	958 *13.98*	912 *13.31*	818 *11.94*	688 *10.04*
		F	5.4+4R *30.8+23R*	6.0+3R *34.3+17R*	6.6+3R *37.7+17R*	7.1+2R *40.5+11R*	7.6+2R *43.4+11R*	8.1+2R *46.3+11R*	8.5+2R *48.5+11R*	9.0+2R *51.4+11R*	9.4+1R *53.7+6R*
	TSW @ 6"	q	1965 *28.68*	1745 *25.47*	1596 *23.29*	1488 *21.72*	1406 *20.52*	1223 *17.85*	990 *14.45*	818 *11.94*	688 *10.04*
		F	3.5+4R *20.0+23R*	3.7+3R *21.1+17R*	3.9+3R *22.3+17R*	4.1+2R *23.4+11R*	4.2+2R *24.0+11R*	4.4+2R *25.1+11R*	4.5+2R *25.7+11R*	4.6+2R *26.3+11R*	4.8+1R *27.4+6R*

BP = Button Punch; TSW = Top Seam Weld

Type HSB®-36

- 7 Weld Pattern at Supports
- Button Punch or 1½" Top Seam Weld
- Primer Painted or Galvanized

Allowable Diaphragm Shear Values, q (plf, *kN/m*) and Flexibility Factors, F ((in./lb)x10^6, (*mm/N*)*x10*^{6})

GAGE	SIDELAP ATTACH-MENT		SPAN (ft-in., *mm*) 4'-0" *1,220*	5'-0" *1,520*	6'-0" *1,830*	7'-0" *2,130*	8'-0" *2,440*	9'-0" *2,740*	10'-0" *3,050*	11'-0" *3,350*	12'-0" *3,660*
18	BP @ 24"	q	1405 *20.50*	1140 *16.64*	943 *13.76*	818 *11.94*	712 *10.39*	640 *9.34*	574 *8.38*	527 *7.69*	482 *7.03*
		F	3.1+17R *17.7+97R*	4.0+14R *22.8+80R*	5.2+11R *29.7+63R*	6.7+10R *38.3+57R*	8.7+9R *49.7+51R*	10.9+8R *62.2+46R*	13.7+7R *78.2+40R*	16.8+6R *95.9+34R*	20.6+6R *117.6+34R*
	BP @ 12"	q	1475 *21.53*	1188 *17.34*	996 *14.54*	860 *12.55*	757 *11.05*	678 *9.89*	614 *8.96*	562 *8.20*	518 *7.56*
		F	3.0+17R *17.1+97R*	3.9+14R *22.3+80R*	5.0+11R *28.6+63R*	6.5+10R *37.1+57R*	8.3+9R *47.4+51R*	10.4+8R *59.4+46R*	12.9+7R *73.7+40R*	15.9+6R *90.8+34R*	19.2+6R *109.6+34R*
	TSW @ 24"	q	1571 *22.93*	1495 *21.82*	1229 *17.94*	1206 *17.60*	1044 *15.24*	1039 *15.16*	926 *13.51*	928 *13.54*	844 *12.32*
		F	6.8+2R *38.8+11R*	6.7+2R *38.3+11R*	9.1+1R *52.0+6R*	9.0+1R *51.4+6R*	11.4+1R *65.1+6R*	11.2+1R *64.0+6R*	13.7+1R *78.2+6R*	13.4+1R *76.5+6R*	15.9+1R *90.8+6R*
	TSW @ 18"	q	1895 *27.66*	1730 *25.25*	1424 *20.78*	1363 *19.89*	1312 *19.15*	1155 *16.86*	1131 *16.51*	1110 *16.20*	1010 *14.74*
		F	4.8+2R *27.4+11R*	5.2+2R *29.7+11R*	6.9+1R *39.4+6R*	7.1+1R *40.5+6R*	7.4+1R *42.3+6R*	9.1+1R *52.0+6R*	9.4+1R *53.7+6R*	9.6+1R *54.8+6R*	11.3+1R *64.5+6R*
	TSW @ 12"	q	2191 *31.98*	1952 *28.49*	1767 *25.79*	1612 *23.53*	1495 *21.82*	1405 *20.50*	1332 *19.44*	1257 *18.34*	1057 *15.43*
		F	3.9+2R *22.3+11R*	4.3+2R *24.6+11R*	4.8+1R *27.4+6R*	5.2+1R *29.7+6R*	5.6+1R *32.0+6R*	6.0+1R *34.3+6R*	6.4+1R *36.5+6R*	6.7+1R *38.3+6R*	7.1+1R *40.5+6R*
	TSW @ 6"	q	2878 *42.00*	2535 *37.00*	2304 *33.62*	2139 *31.22*	2014 *29.39*	1878 *27.41*	1521 *22.20*	1257 *18.34*	1057 *15.43*
		F	2.6+2R *14.8+11R*	2.8+2R *16.0+11R*	2.9+1R *16.6+6R*	3.0+1R *17.1+6R*	3.2+1R *18.3+6R*	3.3+1R *18.8+6R*	3.4+1R *19.4+6R*	3.5+1R *20.0+6R*	3.6+1R *20.6+6R*
16	BP @ 24"	q	1825 *26.63*	1475 *21.53*	1223 *17.85*	1058 *15.44*	922 *13.46*	826 *12.05*	741 *10.81*	679 *9.91*	621 *9.06*
		F	2.8+9R *16.0+51R*	3.7+7R *21.1+40R*	4.9+6R *28.0+34R*	6.5+5R *37.1+29R*	8.5+4R *48.5+23R*	10.8+4R *61.7+23R*	13.6+4R *77.7+23R*	16.8+3R *95.9+17R*	20.6+3R *117.6+17R*
	BP @ 12"	q	1891 *27.60*	1521 *22.20*	1273 *18.58*	1097 *16.01*	964 *14.07*	862 *12.58*	779 *11.37*	712 *10.39*	656 *9.57*
		F	2.7+9R *15.4+51R*	3.6+7R *20.6+40R*	4.8+6R *27.4+34R*	6.3+5R *36.0+29R*	8.1+4R *46.3+23R*	10.4+4R *59.4+23R*	13.0+4R *74.2+23R*	16.1+3R *91.9+17R*	19.6+3R *111.9+17R*
	TSW @ 24"	q	2171 *31.68*	2043 *29.82*	1675 *24.44*	1630 *23.79*	1406 *20.52*	1390 *20.29*	1236 *18.04*	1233 *17.99*	1119 *16.33*
		F	5.0+1R *28.6+6R*	5.1+1R *29.1+6R*	6.9+1R *39.4+6R*	6.8+1R *38.8+6R*	8.7+1R *49.7+6R*	8.6+1R *49.1+6R*	10.6+1R *60.5+6R*	10.4 *59.4*	12.4 *70.8*
	TSW @ 18"	q	2599 *37.93*	2350 *34.30*	1929 *28.15*	1833 *26.75*	1734 *25.31*	1540 *22.47*	1487 *21.70*	1431 *20.88*	1324 *19.32*
		F	3.6+1R *20.6+6R*	4.0+1R *22.8+6R*	5.2+1R *29.7+6R*	5.5+1R *31.4+6R*	5.7+1R *32.5+6R*	7.1+1R *40.5+6R*	7.3+1R *41.7+6R*	7.5 *42.8*	8.9 *50.8*
	TSW @ 12"	q	2985 *43.56*	2556 *37.30*	2270 *33.13*	2065 *30.14*	1912 *27.90*	1793 *26.17*	1699 *24.80*	1622 *23.67*	1478 *21.57*
		F	3.0+1R *17.1+6R*	3.3+1R *18.8+6R*	3.7+1R *21.1+6R*	4.0+1R *22.8+6R*	4.3+1R *24.6+6R*	4.7+1R *26.8+6R*	5.0+1R *28.6+6R*	5.3 *30.3*	5.6 *32.0*
	TSW @ 6"	q	3664 *53.47*	3215 *46.92*	2914 *42.53*	2698 *39.37*	2538 *37.04*	2413 *35.22*	2129 *31.07*	1759 *25.67*	1478 *21.57*
		F	2.0+1R *11.4+6R*	2.2+1R *12.6+6R*	2.3+1R *13.1+6R*	2.4+1R *13.7+6R*	2.5+1R *14.3+6R*	2.6+1R *14.8+6R*	2.7+1R *15.4+6R*	2.8 *16.0*	2.9 *16.6*

BP = Button Punch; TSW = Top Seam Weld

ShearTranz® II-42 with PLB™-36 Deck

- **7 Weld Pattern at Supports**
- **Sidelaps Connected with PunchLok® Tool**
- **Primer Painted or Galvanized**

Allowable Diaphragm Shear Values, q (plf, *kN/m*) and Flexibility Factors, F ((in./lb)x10^6, (*mm/N*)*x10*^{6})

GAGE	SIDELAP ATTACH-MENT		SPAN (ft-in., *mm*)								
			4'-0" *1,220*	5'-0" *1,520*	6'-0" *1,830*	7'-0" *2,130*	8'-0" *2,440*	9'-0" *2,740*	10'-0" *3,050*	11'-0" *3,350*	12'-0" *3,660*
22	VSC @ 24"	q	1167 *17.03*	986 *14.39*	844 *12.32*	766 *11.18*	689 *10.06*	650 *9.49*	602 *8.79*		
		F	5.5+4R *31.4+23R*	5.6+4R *32.0+23R*	6.7+5R *38.3+29R*	6.8+6R *38.8+34R*	7.8+7R *44.5+40R*	7.8+8R *44.5+46R*	8.8+9R *50.2+51R*		
	VSC @ 18"	q	1199 *17.50*	1012 *14.77*	869 *12.68*	788 *11.50*	729 *10.64*	668 *9.75*	637 *9.30*		
		F	4.7+4R *26.8+23R*	5.0+4R *28.6+23R*	5.8+5R *33.1+29R*	6.1+6R *34.8+34R*	6.3+7R *36.0+40R*	7.1+8R *40.5+46R*	7.2+9R *41.1+51R*		
	VSC @ 12"	q	1225 *17.88*	1034 *15.09*	910 *13.28*	825 *12.04*	762 *11.12*	716 *10.45*	681 *9.94*		
		F	4.3+4R *24.6+23R*	4.6+4R *26.3+23R*	4.9+5R *28.0+29R*	5.2+6R *29.7+34R*	5.5+7R *31.4+40R*	5.7+8R *32.5+46R*	6.0+9R *34.3+51R*		
	VSC @ 8"	q	1270 *18.53*	1091 *15.92*	961 *14.02*	885 *12.92*	819 *11.95*	780 *11.38*	741 *10.81*		
		F	3.9+4R *22.3+23R*	4.0+4R *22.8+23R*	4.3+5R *24.6+29R*	4.4+6R *25.1+34R*	4.6+7R *26.3+40R*	4.7+8R *26.8+46R*	4.9+9R *28.0+51R*		
	VSC @ 6"	q	1308 *19.09*	1123 *16.39*	1004 *14.65*	923 *13.47*	866 *12.64*	824 *12.03*	753 *10.99*		
		F	3.6+4R *20.6+23R*	3.8+4R *21.7+23R*	3.9+5R *22.3+29R*	4.1+6R *23.4+34R*	4.2+7R *24.0+40R*	4.3+8R *24.6+46R*	4.4+9R *25.1+51R*		
	VSC @ 4"	q	1371 *20.01*	1190 *17.37*	1076 *15.70*	999 *14.58*	945 *13.79*	906 *13.22*	753 *10.99*		
		F	3.4+4R *19.4+23R*	3.5+4R *20.0+23R*	3.6+5R *20.6+29R*	3.7+6R *21.1+34R*	3.7+7R *21.1+40R*	3.8+8R *21.7+46R*	3.9+9R *22.3+51R*		
20	VSC @ 24"	q	1513 *22.08*	1287 *18.78*	1105 *16.13*	1009 *14.73*	911 *13.30*	864 *12.61*	802 *11.70*	778 *11.35*	688 *10.04*
		F	4.6+3R *26.3+17R*	4.7+3R *26.8+17R*	5.6+4R *32.0+23R*	5.7+5R *32.5+29R*	6.5+6R *37.1+34R*	6.5+6R *37.1+34R*	7.4+7R *42.3+40R*	7.3+8R *41.7+46R*	8.1+8R *46.3+46R*
	VSC @ 18"	q	1558 *22.74*	1323 *19.31*	1140 *16.64*	1040 *15.18*	968 *14.13*	891 *13.00*	853 *12.45*	818 *11.94*	688 *10.04*
		F	3.9+3R *22.3+17R*	4.2+3R *24.0+17R*	4.9+4R *28.0+23R*	5.1+5R *29.1+29R*	5.2+6R *29.7+34R*	5.9+6R *33.7+34R*	6.0+7R *34.3+40R*	6.1+8R *34.8+46R*	6.7+8R *38.3+46R*
	VSC @ 12"	q	1597 *23.31*	1356 *19.79*	1200 *17.51*	1093 *15.95*	1017 *14.84*	960 *14.01*	917 *13.38*	818 *11.94*	688 *10.04*
		F	3.6+3R *20.6+17R*	3.9+3R *22.3+17R*	4.1+4R *23.4+23R*	4.3+5R *24.6+29R*	4.6+6R *26.3+34R*	4.8+6R *27.4+34R*	4.9+7R *28.0+40R*	5.1+8R *29.1+46R*	5.3+8R *30.3+46R*
	VSC @ 8"	q	1661 *24.24*	1437 *20.97*	1274 *18.59*	1181 *17.24*	1098 *16.02*	1053 *15.37*	990 *14.45*	818 *11.94*	688 *10.04*
		F	3.2+3R *18.3+17R*	3.3+3R *18.8+17R*	3.6+4R *20.6+23R*	3.7+5R *21.1+29R*	3.9+6R *22.3+34R*	3.9+6R *22.3+34R*	4.1+7R *23.4+40R*	4.1+8R *23.4+46R*	4.3+8R *24.6+46R*
	VSC @ 6"	q	1715 *25.03*	1483 *21.64*	1335 *19.48*	1236 *18.04*	1166 *17.02*	1116 *16.29*	990 *14.45*	818 *11.94*	688 *10.04*
		F	3.0+3R *17.1+17R*	3.2+3R *18.3+17R*	3.3+4R *18.8+23R*	3.4+5R *19.4+29R*	3.5+6R *20.0+34R*	3.6+6R *20.6+34R*	3.6+7R *20.6+40R*	3.7+8R *21.1+46R*	3.8+8R *21.7+46R*
	VSC @ 4"	q	1806 *26.36*	1580 *23.06*	1439 *21.00*	1345 *19.63*	1281 *18.69*	1223 *17.85*	990 *14.45*	818 *11.94*	688 *10.04*
		F	2.8+3R *16.0+17R*	2.9+3R *16.6+17R*	3.0+4R *17.1+23R*	3.0+5R *17.1+29R*	3.1+6R *17.7+34R*	3.2+6R *18.3+34R*	3.2+7R *18.3+40R*	3.2+8R *18.3+46R*	3.3+8R *18.8+46R*

ShearTranz II-42 element installation per details on pages 58 and 59.
VSC = Verco Sidelap Connection

ShearTranz® II-42 with PLB™-36 Deck

- 7 Weld Pattern at Supports
- Sidelaps Connected with PunchLok® Tool
- Primer Painted or Galvanized

Allowable Diaphragm Shear Values, q (plf, *kN/m*) and Flexibility Factors, F ((in./lb)x10^6, (*mm/N*)*x10*^{6})

GAGE	SIDELAP ATTACH-MENT		SPAN (ft-in., *mm*) 4'-0" *1,220*	5'-0" *1,520*	6'-0" *1,830*	7'-0" *2,130*	8'-0" *2,440*	9'-0" *2,740*	10'-0" *3,050*	11'-0" *3,350*	12'-0" *3,660*
18	VSC @ 24"	q	2171 *31.68*	1870 *27.29*	1616 *23.58*	1496 *21.83*	1359 *19.83*	1304 *19.03*	1218 *17.78*	1195 *17.44*	1057 *15.43*
		F	3.4+2R *19.4+11R*	3.5+2R *20.0+11R*	4.2+3R *24.0+17R*	4.3+3R *24.6+17R*	4.9+4R *28.0+23R*	4.9+4R *28.0+23R*	5.5+5R *31.4+29R*	5.5+5R *31.4+29R*	6.1+6R *34.8+34R*
	VSC @ 18"	q	2250 *32.84*	1934 *28.22*	1678 *24.49*	1549 *22.61*	1459 *21.29*	1351 *19.72*	1308 *19.09*	1257 *18.34*	1057 *15.43*
		F	3.0+2R *17.1+11R*	3.1+2R *17.7+11R*	3.7+3R *21.1+17R*	3.8+3R *21.7+17R*	3.9+4R *22.3+23R*	4.4+4R *25.1+23R*	4.5+5R *25.7+29R*	4.6+5R *26.3+29R*	5.0+6R *28.6+34R*
	VSC @ 12"	q	2315 *33.78*	1990 *29.04*	1782 *26.01*	1642 *23.96*	1544 *22.53*	1473 *21.50*	1421 *20.74*	1257 *18.34*	1057 *15.43*
		F	2.7+2R *15.4+11R*	2.9+2R *16.6+11R*	3.1+3R *17.7+17R*	3.2+3R *18.3+17R*	3.4+4R *19.4+23R*	3.5+4R *20.0+23R*	3.7+5R *21.1+29R*	3.8+5R *21.7+29R*	3.9+6R *22.3+34R*
	VSC @ 8"	q	2426 *35.40*	2130 *31.09*	1910 *27.87*	1794 *26.18*	1686 *24.61*	1637 *23.89*	1521 *22.20*	1257 *18.34*	1057 *15.43*
		F	2.4+2R *13.7+11R*	2.5+2R *14.3+11R*	2.7+3R *15.4+17R*	2.7+3R *15.4+17R*	2.9+4R *16.6+23R*	2.9+4R *16.6+23R*	3.0+5R *17.1+29R*	3.1+5R *17.7+29R*	3.2+6R *18.3+34R*
	VSC @ 6"	q	2519 *36.76*	2210 *32.25*	2017 *29.44*	1891 *27.60*	1805 *26.34*	1747 *25.50*	1521 *22.20*	1257 *18.34*	1057 *15.43*
		F	2.3+2R *13.1+11R*	2.4+2R *13.7+11R*	2.4+3R *13.7+17R*	2.5+3R *14.3+17R*	2.6+4R *14.8+23R*	2.6+4R *14.8+23R*	2.7+5R *15.4+29R*	2.7+5R *15.4+29R*	2.8+6R *16.0+34R*
	VSC @ 4"	q	2676 *39.05*	2378 *34.70*	2197 *32.06*	2082 *30.38*	2006 *29.28*	1878 *27.41*	1521 *22.20*	1257 *18.34*	1057 *15.43*
		F	2.1+2R *12.0+11R*	2.2+2R *12.6+11R*	2.2+3R *12.6+17R*	2.3+3R *13.1+17R*	2.3+4R *13.1+23R*	2.3+4R *13.1+23R*	2.4+5R *13.7+29R*	2.4+5R *13.7+29R*	2.4+6R *13.7+34R*
16	VSC @ 24"	q	2839 *41.43*	2476 *36.13*	2154 *31.44*	2018 *29.45*	1844 *26.91*	1790 *26.12*	1682 *24.55*	1667 *24.33*	1478 *21.57*
		F	2.8+1R *16.0+6R*	2.8+2R *16.0+11R*	3.4+2R *19.4+11R*	3.4+3R *19.4+17R*	3.9+3R *22.3+17R*	3.9+3R *22.3+17R*	4.4+4R *25.1+23R*	4.3+4R *24.6+23R*	4.8+4R *27.4+23R*
	VSC @ 18"	q	2958 *43.17*	2573 *37.55*	2249 *32.82*	2100 *30.65*	1999 *29.17*	1863 *27.19*	1821 *26.58*	1759 *25.67*	1478 *21.57*
		F	2.4+1R *13.7+6R*	2.5+2R *14.3+11R*	2.9+2R *16.6+11R*	3.0+3R *17.1+17R*	3.1+3R *17.7+17R*	3.5+3R *20.0+17R*	3.6+4R *20.6+23R*	3.6+4R *20.6+23R*	3.9+4R *22.3+23R*
	VSC @ 12"	q	3058 *44.63*	2659 *38.81*	2408 *35.14*	2243 *32.73*	2130 *31.09*	2051 *29.93*	1996 *29.13*	1759 *25.67*	1478 *21.57*
		F	2.2+1R *12.6+6R*	2.3+2R *13.1+11R*	2.5+2R *14.3+11R*	2.6+3R *14.8+17R*	2.7+3R *15.4+17R*	2.8+3R *16.0+17R*	2.9+4R *16.6+23R*	3.0+4R *17.1+23R*	3.1+4R *17.7+23R*
	VSC @ 8"	q	3226 *47.08*	2873 *41.93*	2604 *38.00*	2477 *36.15*	2349 *34.28*	2304 *33.62*	2129 *31.07*	1759 *25.67*	1478 *21.57*
		F	1.9+1R *10.8+6R*	2.0+2R *11.4+11R*	2.1+2R *12.0+11R*	2.2+3R *12.6+17R*	2.3+3R *13.1+17R*	2.3+3R *13.1+17R*	2.4+4R *13.7+23R*	2.4+4R *13.7+23R*	2.5+4R *14.3+23R*
	VSC @ 6"	q	3368 *49.15*	2994 *43.69*	2768 *40.40*	2625 *38.31*	2533 *36.97*	2475 *36.12*	2129 *31.07*	1759 *25.67*	1478 *21.57*
		F	1.8+1R *10.3+6R*	1.9+2R *10.8+11R*	1.9+2R *10.8+11R*	2.0+3R *11.4+17R*	2.0+3R *11.4+17R*	2.1+3R *12.0+17R*	2.1+4R *12.0+23R*	2.2+4R *12.6+23R*	2.2+4R *12.6+23R*
	VSC @ 4"	q	3606 *52.63*	3252 *47.46*	3044 *44.42*	2918 *42.59*	2843 *41.49*	2628 *38.35*	2129 *31.07*	1759 *25.67*	1478 *21.57*
		F	1.7+1R *9.7+6R*	1.7+2R *9.7+11R*	1.8+2R *10.3+11R*	1.8+3R *10.3+17R*	1.8+3R *10.3+17R*	1.8+3R *10.3+17R*	1.9+4R *10.8+23R*	1.9+4R *10.8+23R*	1.9+4R *10.8+23R*

ShearTranz II-42 element installation per details on pages 58 and 59.
VSC = Verco Sidelap Connection

ShearTranz® II with HSB®-36 Deck

- **7 Weld Pattern at Supports**
- **Button Punch or 1½" Top Seam Weld**
- **Primer Painted or Galvanized**

Allowable Diaphragm Shear Values, q (plf, *kN/m*) and Flexibility Factors, F ((in./lb)x10^6, (*mm/N*)*x10*^{6})

GAGE	SIDELAP ATTACH-MENT		SPAN (ft-in., *mm*)										
			5'-0" *1,520*	5'-6" *1,680*	6'-0" *1,830*	6'-6" *1,980*	7'-0" *2,130*	7'-6" *2,290*	8'-0" *2,440*	8'-6" *2,590*	9'-0" *2,740*	9'-6" *2,900*	10'-0" *3,050*
22	BP @ 24"	q	953 *13.91*	880 *12.84*	819 *11.95*	767 *11.19*	724 *10.57*	686 *10.01*	653 *9.53*	624 *9.11*	598 *8.73*	576 *8.41*	555 *8.10*
		F	7.8 *44.5*	8.4 *48.0*	8.9 *50.8*	9.5 *54.2*	10.0 *57.1*	10.5 *60.0*	11.1 *63.4*	11.6 *66.2*	12.2 *69.7*	12.7 *72.5*	13.3 *75.9*
	BP @ 18"	q	997 *14.55*	924 *13.48*	863 *12.59*	813 *11.86*	769 *11.22*	732 *10.68*	699 *10.20*	671 *9.79*	646 *9.43*	623 *9.09*	603 *8.80*
		F	7.6 *43.4*	8.1 *46.3*	8.6 *49.1*	9.1 *52.0*	9.6 *54.8*	10.1 *57.7*	10.5 *60.0*	11.0 *62.8*	11.5 *65.7*	12.0 *68.5*	12.4 *70.8*
	BP @ 12"	q	1084 *15.82*	1012 *14.77*	953 *13.91*	903 *13.18*	860 *12.55*	824 *12.03*	792 *11.56*	765 *11.16*	740 *10.80*	719 *10.49*	700 *10.22*
		F	7.2 *41.1*	7.6 *43.4*	8.1 *46.3*	8.5 *48.5*	8.9 *50.8*	9.2 *52.5*	9.6 *54.8*	10.0 *57.1*	10.4 *59.4*	10.7 *61.1*	11.1 *63.4*
	TSW @ 24"	q	865 *12.62*	808 *11.79*	759 *11.08*	719 *10.49*	684 *9.98*	654 *9.54*	628 *9.16*	605 *8.83*	585 *8.54*	567 *8.27*	551 *8.04*
		F	5.1 *29.1*	5.3 *30.3*	5.5 *31.4*	5.7 *32.5*	5.9 *33.7*	6.1 *34.8*	6.2 *35.4*	6.4 *36.5*	6.5 *37.1*	6.7 *38.3*	6.8 *38.8*
	TSW @ 18"	q	961 *14.02*	904 *13.19*	855 *12.48*	815 *11.89*	780 *11.38*	750 *10.95*	724 *10.57*	701 *10.23*	681 *9.94*	663 *9.68*	647 *9.44*
		F	4.9 *28.0*	5.1 *29.1*	5.2 *29.7*	5.4 *30.8*	5.5 *31.4*	5.6 *32.0*	5.8 *33.1*	5.9 *33.7*	6.0 *34.3*	6.1 *34.8*	6.2 *35.4*
	TSW @ 12"	q	1153 *16.83*	1095 *15.98*	1047 *15.28*	1007 *14.70*	972 *14.19*	942 *13.75*	916 *13.37*	893 *13.03*	873 *12.74*	855 *12.48*	839 *12.24*
		F	4.6 *26.3*	4.7 *26.8*	4.8 *27.4*	4.9 *28.0*	5.0 *28.6*	5.1 *29.1*	5.1 *29.1*	5.2 *29.7*	5.3 *30.3*	5.4 *30.8*	5.5 *31.4*
20	BP @ 24"	q	1120 *16.35*	1032 *15.06*	959 *14.00*	898 *13.11*	845 *12.33*	799 *11.66*	760 *11.09*	725 *10.58*	694 *10.13*	667 *9.73*	643 *9.38*
		F	6.1 *34.8*	6.5 *37.1*	6.9 *39.4*	7.3 *41.7*	7.7 *44.0*	8.2 *46.8*	8.6 *49.1*	9.1 *52.0*	9.5 *54.2*	9.9 *56.5*	10.4 *59.4*
	BP @ 18"	q	1165 *17.00*	1078 *15.73*	1005 *14.67*	944 *13.78*	892 *13.02*	847 *12.36*	808 *11.79*	773 *11.28*	743 *10.84*	716 *10.45*	692 *10.10*
		F	5.9 *33.7*	6.3 *36.0*	6.7 *38.3*	7.1 *40.5*	7.5 *42.8*	7.8 *44.5*	8.2 *46.8*	8.6 *49.1*	9.0 *51.4*	9.4 *53.7*	9.8 *56.0*
	BP @ 12"	q	1255 *18.32*	1168 *17.05*	1097 *16.01*	1037 *15.13*	985 *14.37*	942 *13.75*	903 *13.18*	870 *12.70*	841 *12.27*	815 *11.89*	792 *11.56*
		F	5.7 *32.5*	6.0 *34.3*	6.3 *36.0*	6.6 *37.7*	7.0 *40.0*	7.3 *41.7*	7.6 *43.4*	7.9 *45.1*	8.2 *46.8*	8.6 *49.1*	8.9 *50.8*
	TSW @ 24"	q	1309 *19.10*	1218 *17.78*	1143 *16.68*	1079 *15.75*	1025 *14.96*	978 *14.27*	938 *13.69*	902 *13.16*	870 *12.70*	842 *12.29*	817 *11.92*
		F	4.1 *23.4*	4.2 *24.0*	4.4 *25.1*	4.5 *25.7*	4.6 *26.3*	4.8 *27.4*	4.9 *28.0*	5.0 *28.6*	5.2 *29.7*	5.3 *30.3*	5.4 *30.8*
	TSW @ 18"	q	1447 *21.12*	1356 *19.79*	1281 *18.69*	1218 *17.78*	1163 *16.97*	1117 *16.30*	1076 *15.70*	1040 *15.18*	1008 *14.71*	980 *14.30*	955 *13.94*
		F	3.9 *22.3*	4.0 *22.8*	4.1 *23.4*	4.3 *24.6*	4.4 *25.1*	4.5 *25.7*	4.6 *26.3*	4.7 *26.8*	4.8 *27.4*	4.9 *28.0*	5.0 *28.6*
	TSW @ 12"	q	1724 *25.16*	1633 *23.83*	1558 *22.74*	1494 *21.80*	1440 *21.02*	1393 *20.33*	1352 *19.73*	1317 *19.22*	1285 *18.75*	1209 *17.64*	1091 *15.92*
		F	3.6 *20.6*	3.7 *21.1*	3.8 *21.7*	3.9 *22.3*	4.0 *22.8*	4.0 *22.8*	4.1 *23.4*	4.2 *24.0*	4.3 *24.6*	4.3 *24.6*	4.4 *25.1*

ShearTranz II element installation per details on pages 58 and 59.
BP = Button Punch; TSW = Top Seam Weld

ShearTranz® II with HSB®-36 Deck

- 7 Weld Pattern at Supports
- Button Punch or 1½" Top Seam Weld
- Primer Painted or Galvanized

Allowable Diaphragm Shear Values, q (plf, *kN/m*) and Flexibility Factors, F ((in./lb)x10^6, (*mm/N*)*x10*^{6})

GAGE	SIDELAP ATTACH-MENT		SPAN (ft-in., *mm*)										
			5'-0" *1,520*	5'-6" *1,680*	6'-0" *1,830*	6'-6" *1,980*	7'-0" *2,130*	7'-6" *2,290*	8'-0" *2,440*	8'-6" *2,590*	9'-0" *2,740*	9'-6" *2,900*	10'-0" *3,050*
18	BP @ 24"	q	1453 *21.20*	1335 *19.48*	1238 *18.07*	1156 *16.87*	1085 *15.83*	1025 *14.96*	972 *14.19*	926 *13.51*	885 *12.92*	848 *12.38*	815 *11.89*
		F	4.1 *23.4*	4.4 *25.1*	4.6 *26.3*	4.9 *28.0*	5.2 *29.7*	5.5 *31.4*	5.8 *33.1*	6.2 *35.4*	6.5 *37.1*	6.8 *38.8*	7.1 *40.5*
	BP @ 18"	q	1499 *21.88*	1382 *20.17*	1286 *18.77*	1204 *17.57*	1135 *16.56*	1075 *15.69*	1022 *14.91*	977 *14.26*	936 *13.66*	900 *13.13*	868 *12.67*
		F	4.0 *22.8*	4.3 *24.6*	4.5 *25.7*	4.8 *27.4*	5.1 *29.1*	5.4 *30.8*	5.6 *32.0*	5.9 *33.7*	6.2 *35.4*	6.5 *37.1*	6.8 *38.8*
	BP @ 12"	q	1592 *23.23*	1477 *21.56*	1381 *20.15*	1301 *18.99*	1233 *17.99*	1174 *17.13*	1123 *16.39*	1079 *15.75*	1040 *15.18*	1005 *14.67*	974 *14.21*
		F	3.9 *22.3*	4.1 *23.4*	4.3 *24.6*	4.6 *26.3*	4.8 *27.4*	5.1 *29.1*	5.3 *30.3*	5.5 *31.4*	5.8 *33.1*	6.0 *34.3*	6.2 *35.4*
	TSW @ 24"	q	1862 *27.17*	1751 *25.55*	1659 *24.21*	1583 *23.10*	1518 *22.15*	1463 *21.35*	1416 *20.66*	1375 *20.07*	1339 *19.54*	1308 *19.09*	1281 *18.69*
		F	2.8 *16.0*	2.9 *16.6*	3.0 *17.1*	3.1 *17.7*	3.2 *18.3*	3.3 *18.8*	3.4 *19.4*	3.5 *20.0*	3.6 *20.6*	3.7 *21.1*	3.8 *21.7*
	TSW @ 18"	q	2045 *29.84*	1936 *28.25*	1847 *26.95*	1773 *25.87*	1711 *24.97*	1659 *24.21*	1614 *23.55*	1576 *23.00*	1543 *22.52*	1514 *22.10*	1453 *21.20*
		F	2.7 *15.4*	2.8 *16.0*	2.9 *16.6*	3.0 *17.1*	3.1 *17.7*	3.1 *17.7*	3.2 *18.3*	3.3 *18.8*	3.4 *19.4*	3.4 *19.4*	3.5 *20.0*
	TSW @ 12"	q	2411 *35.19*	2307 *33.67*	2224 *32.46*	2155 *31.45*	2098 *30.62*	2051 *29.93*	2011 *29.35*	1978 *28.87*	1794 *26.18*	1610 *23.50*	1453 *21.20*
		F	2.6 *14.8*	2.7 *15.4*	2.7 *15.4*	2.8 *16.0*	2.8 *16.0*	2.9 *16.6*	2.9 *16.6*	3.0 *17.1*	3.0 *17.1*	3.1 *17.7*	3.1 *17.7*
16	BP @ 24"	q	1787 *26.08*	1640 *23.93*	1518 *22.15*	1415 *20.65*	1328 *19.38*	1252 *18.27*	1185 *17.29*	1127 *16.45*	1076 *15.70*	1030 *15.03*	989 *14.43*
		F	3.0 *17.1*	3.2 *18.3*	3.4 *19.4*	3.7 *21.1*	3.9 *22.3*	4.1 *23.4*	4.4 *25.1*	4.6 *26.3*	4.8 *27.4*	5.1 *29.1*	5.3 *30.3*
	BP @ 18"	q	1835 *26.78*	1689 *24.65*	1568 *22.88*	1466 *21.39*	1379 *20.12*	1304 *19.03*	1238 *18.07*	1181 *17.24*	1130 *16.49*	1085 *15.83*	1045 *15.25*
		F	3.0 *17.1*	3.2 *18.3*	3.4 *19.4*	3.6 *20.6*	3.8 *21.7*	4.0 *22.8*	4.2 *24.0*	4.4 *25.1*	4.7 *26.8*	4.9 *28.0*	5.1 *29.1*
	BP @ 12"	q	1932 *28.20*	1787 *26.08*	1668 *24.34*	1567 *22.87*	1482 *21.63*	1408 *20.55*	1344 *19.61*	1288 *18.80*	1239 *18.08*	1195 *17.44*	1156 *16.87*
		F	2.9 *16.6*	3.1 *17.7*	3.3 *18.8*	3.4 *19.4*	3.6 *20.6*	3.8 *21.7*	4.0 *22.8*	4.2 *24.0*	4.4 *25.1*	4.6 *26.3*	4.8 *27.4*
	TSW @ 24"	q	2279 *33.26*	2140 *31.23*	2026 *29.57*	1932 *28.20*	1852 *27.03*	1784 *26.04*	1725 *25.17*	1675 *24.44*	1631 *23.80*	1592 *23.23*	1559 *22.75*
		F	2.2 *12.6*	2.2 *12.6*	2.3 *13.1*	2.4 *13.7*	2.5 *14.3*	2.5 *14.3*	2.6 *14.8*	2.7 *15.4*	2.8 *16.0*	2.8 *16.0*	2.9 *16.6*
	TSW @ 18"	q	2491 *36.35*	2356 *34.38*	2246 *32.78*	2154 *31.44*	2078 *30.33*	2013 *29.38*	1958 *28.57*	1911 *27.89*	1870 *27.29*	1835 *26.78*	1803 *26.31*
		F	2.1 *12.0*	2.2 *12.6*	2.2 *12.6*	2.3 *13.1*	2.3 *13.1*	2.4 *13.7*	2.5 *14.3*	2.5 *14.3*	2.6 *14.8*	2.6 *14.8*	2.7 *15.4*
	TSW @ 12"	q	2915 *42.54*	2787 *40.67*	2684 *39.17*	2600 *37.94*	2530 *36.92*	2472 *36.08*	2424 *35.38*	2383 *34.78*	2226 *32.49*	1998 *29.16*	1803 *26.31*
		F	2.0 *11.4*	2.0 *11.4*	2.1 *12.0*	2.1 *12.0*	2.2 *12.6*	2.2 *12.6*	2.3 *13.1*	2.3 *13.1*	2.3 *13.1*	2.4 *13.7*	2.4 *13.7*

ShearTranz II element installation per details on pages 58 and 59.
BP = Button Punch; TSW = Top Seam Weld

ShearTranz® Details

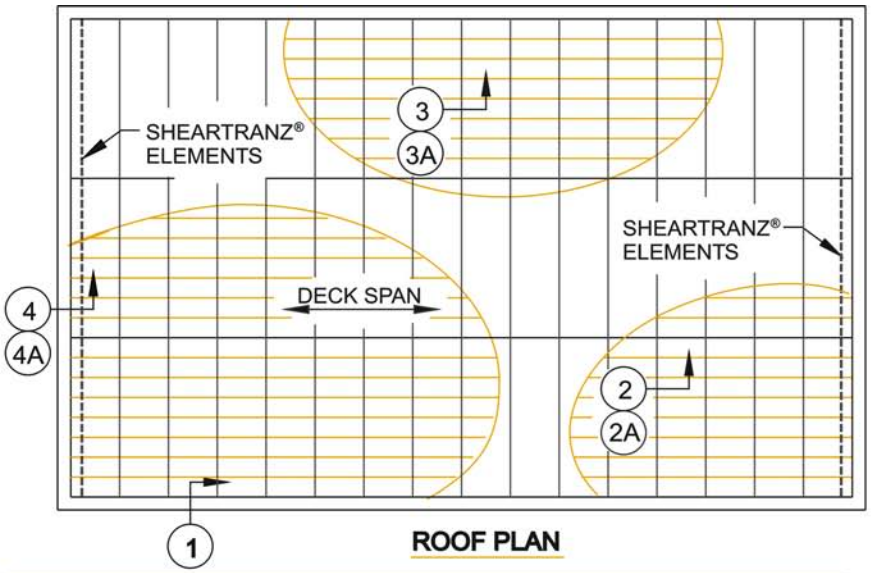

ROOF PLAN

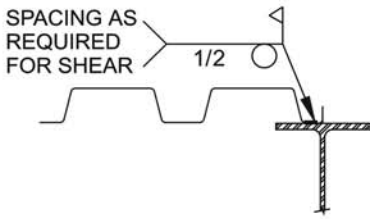

1 PARALLEL SUPPORTS

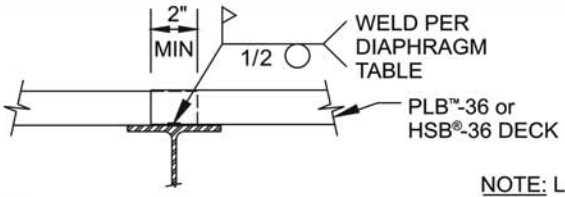

NOTE: LAP DECK MIN. 2" AT ENDLAPS.

2 INTERIOR ENDLAP for PLB™-36 or HSB®-36 Deck

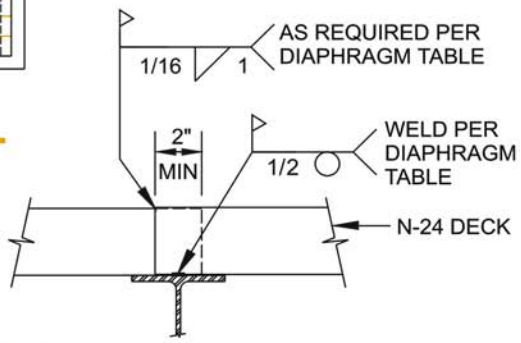

2A INTERIOR ENDLAP for N-24 Deck

ShearTranz® II Systems

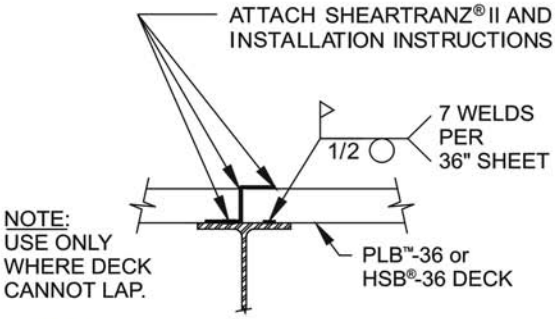

NOTE: USE ONLY WHERE DECK CANNOT LAP.

3 BUTT JOINT for ShearTranz® II Systems

SHEARTRANZ® II CONTINUOUS AT BUTT JOINTS. ATTACH TOP FLANGE OF SHEARTRANZ® II TO BOTH PIECES OF DECK AT BUTT JOINTS.

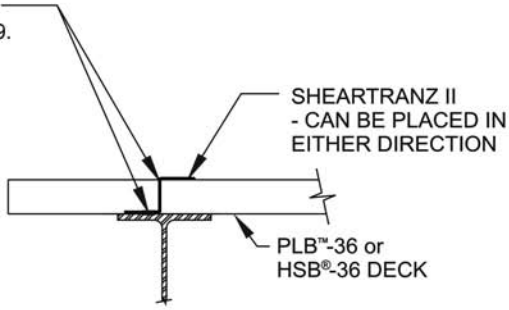

4 PERPENDICULAR PERIMETER SUPPORT for ShearTranz® II Systems

DECK MAY BE CANTILEVERED OR STOP AT SUPPORT.

ShearTranz® System

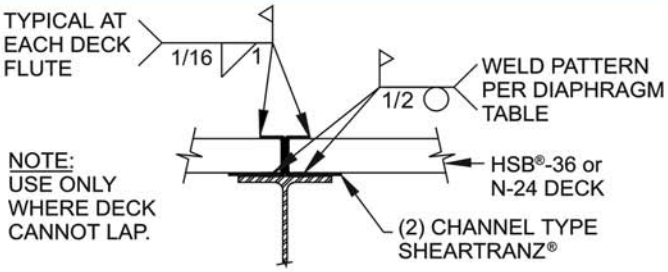

NOTE: USE ONLY WHERE DECK CANNOT LAP.

3A BUTT JOINT for ShearTranz® System

CHANNEL TYPE SHEARTRANZ® SHOWN. ZEE TYPE PERMITTED IF SPACE ALLOWS.

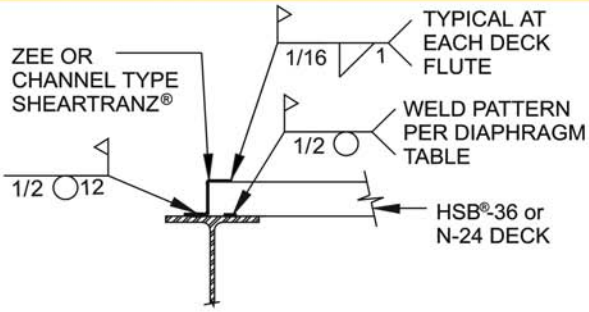

4A PERPENDICULAR PERIMETER SUPPORT for ShearTranz® System

ShearTranz® Element Installation Instructions

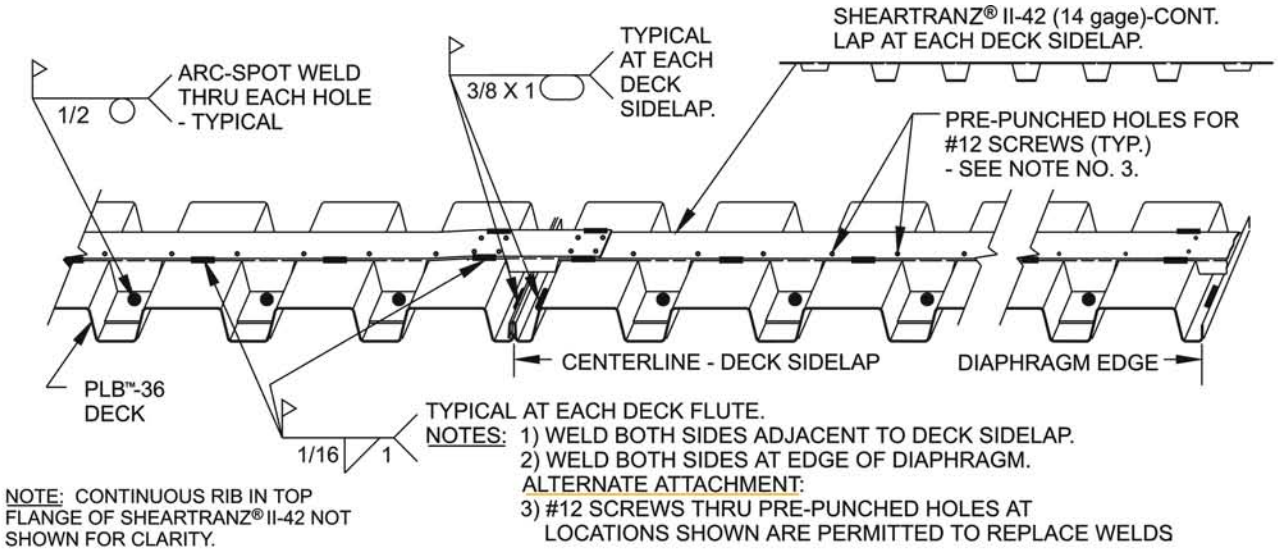

SHEARTRANZ® II-42 FOR PLB™-36 DECK with THE PUNCHLOK® SYSTEM
with VSC SIDELAP CONNECTIONS MADE with THE PUNCHLOK® TOOL

ShearTranz® II-42 System for the PunchLok® System

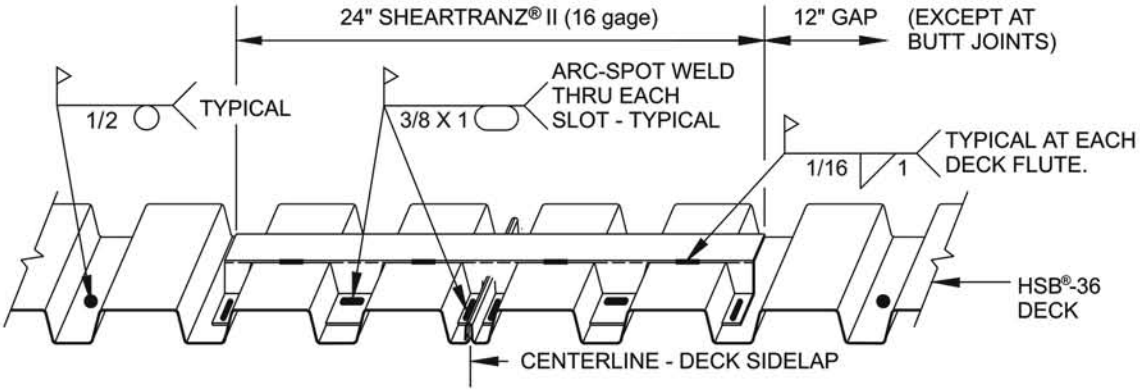

SHEARTRANZ® II FOR HSB®-36 DECK
with BUTTON PUNCHED (BP), SCREW FASTENED,
OR TOP SEAM WELD (TSW) SIDELAPS

ShearTranz® II System for HSB®-36 Deck

SHEAR-TRANZ®

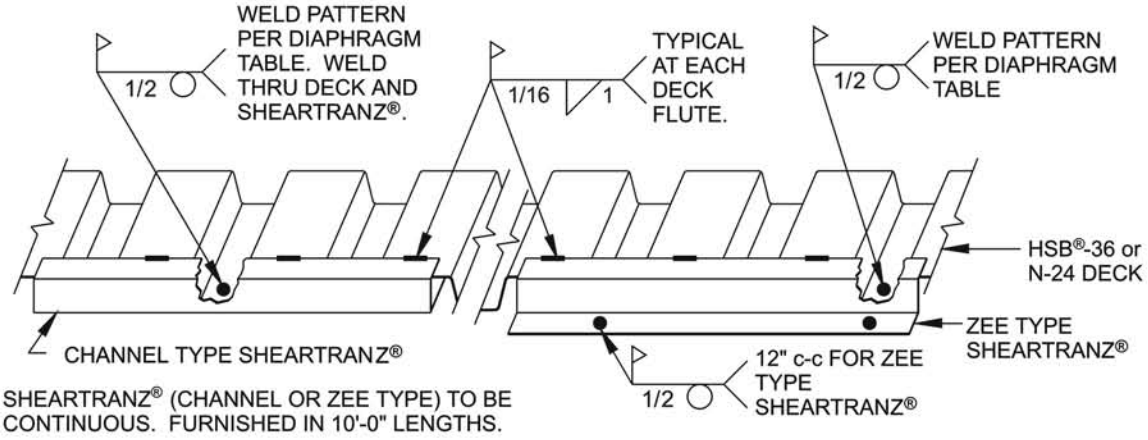

SHEARTRANZ® FOR HSB®-36 OR N-24 DECK
with BUTTON PUNCHED (BP), SCREW FASTENED,
OR TOP SEAM WELD (TSW) SIDELAPS

ShearTranz® System for HSB®-36 and N-24 Deck

ShearTranz® with HSB®-36 Deck

- **6 Weld Pattern at Supports**
- **Button Punch or 1½" Top Seam Weld**
- **Primer Painted or Galvanized**

Allowable Diaphragm Shear Values, q (plf, *kN/m*) and Flexibility Factors, F ((in./lb)x10^6, (*mm/N*)*x10*^{6})

GAGE	SIDELAP ATTACH-MENT		SPAN (ft-in., *mm*) 5'-0" *1,520*	6'-0" *1,830*	7'-0" *2,130*	8'-0" *2,440*	9'-0" *2,740*	10'-0" *3,050*
22	BP @ 24"	q	340 *4.96*	270 *3.94*	270 *3.94*	260 *3.79*	260 *3.79*	
		F	4.8+34.6R *27.4+197.6R*	6.4+28.9R *36.5+165.0R*	7.8+24.7R *44.5+141.0R*	9.5+21.6R *54.2+123.3R*	11.5+19.2R *65.7+109.6R*	
	BP @ 12"	q	390 *5.69*	330 *4.82*	330 *4.82*	320 *4.67*	320 *4.67*	
		F	4.6+34.6R *26.3+197.6R*	5.7+28.9R *32.5+165.0R*	6.9+24.7R *39.4+141.0R*	8.2+21.6R *46.8+123.3R*	9.8+19.2R *56.0+109.6R*	
	TSW @ 24"	q	740 *10.80*	600 *8.76*	550 *8.03*	510 *7.44*	480 *7.01*	460 *6.71*
		F	12.7 *72.5*	15.1 *86.2*	16.2 *92.5*	17.2 *98.2*	18.1 *103.4*	18.8 *107.4*
	TSW @12"	q	1000 *14.59*	920 *13.43*	870 *12.70*	840 *12.26*	810 *11.82*	790 *11.53*
		F	10.1 *57.7*	10.7 *61.1*	11.2 *64.0*	11.5 *65.7*	11.9 *68.0*	12.1 *69.1*
20	BP @ 24"	q	530 *7.73*	420 *6.13*	410 *5.98*	400 *5.84*	390 *5.69*	
		F	4.4+20.0R *25.1+114.2R*	6.0+16.7R *34.3+95.4R*	7.5+14.3R *42.8+81.7R*	9.3+12.5R *53.1+71.4R*	11.4+11.1R *65.1+63.4R*	
	BP @ 12"	q	580 *8.46*	490 *7.15*	480 *7.01*	470 *6.86*	460 *6.71*	
		F	4.2+20.0R *24.0+114.2R*	5.5+16.7R *31.4+95.4R*	6.7+14.3R *38.3+81.7R*	8.2+12.5R *46.8+71.4R*	10.0+11.1R *57.1+63.4R*	
	TSW @ 24"	q	930 *13.57*	780 *11.38*	710 *10.36*	650 *9.49*	610 *8.90*	580 *8.46*
		F	9.8 *56.0*	11.9 *68.0*	12.9 *73.7*	13.6 *77.7*	14.3 *81.7*	15.0 *85.7*
	TSW @12"	q	1230 *17.95*	1180 *17.22*	1100 *16.05*	1050 *15.32*	1010 *14.74*	970 *14.16*
		F	8.0 *45.7*	8.6 *49.1*	9.0 *51.4*	9.3 *53.1*	9.6 *54.8*	9.8 *56.0*
18	BP @ 24"	q	890 *12.99*	730 *10.65*	630 *9.19*	560 *8.17*	500 *7.30*	450 *6.57*
		F	4.2+8.5R *24.0+48.5R*	5.6+7.1R *32.0+40.5R*	7.2+6.1R *41.1+34.8R*	9.1+5.3R *52.0+30.3R*	11.3+4.7R *64.5+26.8R*	13.9+4.2R *79.4+24.0R*
	BP @ 12"	q	950 *13.86*	820 *11.97*	710 *10.36*	630 *9.19*	560 *8.17*	510 *7.44*
		F	3.9+8.5R *22.3+48.5R*	5.2+7.1R *29.7+40.5R*	6.6+6.1R *37.7+34.8R*	8.3+5.3R *47.4+30.3R*	10.2+4.7R *58.2+26.8R*	12.5+4.2R *71.4+24.0R*
	TSW @ 24"	q	1160 *16.93*	990 *14.45*	930 *13.57*	880 *12.84*	860 *12.55*	840 *12.26*
		F	6.6 *37.7*	7.9 *45.1*	8.7 *49.7*	9.4 *53.7*	10.0 *57.1*	10.5 *60.0*
	TSW @ 12"	q	1480 *21.60*	1420 *20.72*	1380 *20.14*	1370 *19.99*	1370 *19.99*	1360 *19.85*
		F	5.6 *32.0*	6.0 *34.3*	6.4 *36.5*	6.7 *38.3*	6.9 *39.4*	7.1 *40.5*

ShearTranz element installation per details on pages 58 and 59.
BP = Button Punch; TSW = Top Seam Weld

ShearTranz® with HSB®-36 Deck

- **6 Weld Pattern at Supports**
- **Button Punch or 1½" Top Seam Weld**
- **Primer Painted or Galvanized**

Allowable Diaphragm Shear Values, q (plf, *kN/m*) and Flexibility Factors, F ((in./lb)x10^6, (*mm/N*)*x10*^{6})

GAGE	SIDELAP ATTACH-MENT		SPAN (ft-in., *mm*) 5'-0" *1,520*	6'-0" *1,830*	7'-0" *2,130*	8'-0" *2,440*	9'-0" *2,740*	10'-0" *3,050*
16	BP @ 24"	q	1080 *15.76*	900 *13.13*	770 *11.24*	680 *9.92*	610 *8.90*	550 *8.03*
		F	3.6+4.3R *20.6+24.6R*	5.4+3.6R *30.8+20.6R*	7.0+3.1R *40.0+17.7R*	8.9+2.7R *50.8+15.4R*	11.2+2.4R *64.0+13.7R*	13.9+2.2R *79.4+12.6R*
	BP @ 12"	q	1140 *16.64*	970 *14.16*	840 *12.26*	740 *10.80*	670 *9.78*	600 *8.76*
		F	3.5+4.3R *20.0+24.6R*	5.0+3.6R *28.6+20.6R*	6.5+3.1R *37.1+17.7R*	8.3+2.7R *47.4+15.4R*	10.4+2.4R *59.4+13.7R*	12.8+2.2R *73.1+12.6R*
	TSW @ 24"	q	1390 *20.29*	1190 *17.37*	1110 *16.20*	1050 *15.32*	1020 *14.89*	1000 *14.59*
		F	4.9 *28.0*	5.8 *33.1*	6.4 *36.5*	7.0 *40.0*	7.5 *42.8*	8.0 *45.7*
	TSW @ 12"	q	1740 *25.39*	1660 *24.23*	1610 *23.50*	1580 *23.06*	1580 *23.06*	1590 *23.20*
		F	4.2 *24.0*	4.6 *26.3*	4.9 *28.0*	5.1 *29.1*	5.4 *30.8*	5.5 *31.4*

ShearTranz® with HSB®-36 Deck

- **7 Weld Pattern at Supports**
- **Button Punch or 1½" Top Seam Weld**
- **Primer Painted or Galvanized**

Allowable Diaphragm Shear Values, q (plf, *kN/m*) and Flexibility Factors, F ((in./lb)x10^6, (*mm/N*)*x10*^{6})

GAGE	SIDELAP ATTACH-MENT		SPAN (ft-in., *mm*) 5'-0" *1,520*	6'-0" *1,830*	7'-0" *2,130*	8'-0" *2,440*	9'-0" *2,740*	10'-0" *3,050*
22	BP @ 24"	q	450 *6.57*	400 *5.84*	380 *5.55*	370 *5.40*	350 *5.11*	
		F	5.1+28.1R *29.1+160.5R*	6.1+23.4R *34.8+133.6R*	7.5+20.0R *42.8+114.2R*	9.3+17.5R *53.1+99.9R*	11.4+15.6R *65.1+89.1R*	
	BP @ 12"	q	510 *7.44*	460 *6.71*	440 *6.42*	430 *6.28*	410 *5.98*	
		F	4.9+28.1R *28.0+160.5R*	5.7+23.4R *32.5+133.6R*	6.9+20.0R *39.4+114.2R*	8.4+17.5R *48.0+99.9R*	10.1+15.6R *57.7+89.1R*	
	TSW @ 24"	q	940 *13.72*	780 *11.38*	730 *10.65*	680 *9.92*	620 *9.05*	580 *8.46*
		F	9.3 *53.1*	11.1 *63.4*	12.3 *70.2*	13.5 *77.1*	14.6 *83.4*	15.5 *88.5*
	TSW @ 12"	q	1160 *16.93*	1090 *15.91*	1050 *15.32*	1010 *14.74*	950 *13.86*	900 *13.13*
		F	8.1 *46.3*	8.8 *50.2*	9.5 *54.2*	10.0 *57.1*	10.5 *60.0*	10.9 *62.2*

ShearTranz element installation per details on pages 58 and 59.
BP = Button Punch; TSW = Top Seam Weld

ShearTranz® with HSB®-36 Deck

- **7 Weld Pattern at Supports**
- **Button Punch or 1½" Top Seam Weld**
- **Primer Painted or Galvanized**

Allowable Diaphragm Shear Values, q (plf, *kN/m*) and Flexibility Factors, F ((in./lb)x10^6, (*mm/N*)*x10*^{6})

GAGE	SIDELAP ATTACH-MENT		SPAN (ft-in., *mm*) 5'-0" *1,520*	6'-0" *1,830*	7'-0" *2,130*	8'-0" *2,440*	9'-0" *2,740*	10'-0" *3,050*
20	BP @ 24"	q	710 *10.36*	620 *9.05*	590 *8.61*	560 *8.17*	520 *7.59*	
		F	4.7+16.2R *26.8+92.5R*	5.7+13.5R *32.5+77.1R*	7.2+11.6R *41.1+66.2R*	9.0+10.1R *51.4+57.7R*	11.2+9.0R *64.0+51.4R*	
	BP @ 12"	q	770 *11.24*	690 *10.07*	660 *9.63*	640 *9.34*	580 *8.46*	
		F	4.5+16.2R *25.7+92.5R*	5.4+13.5R *30.8+77.1R*	6.7+11.6R *38.3+66.2R*	8.3+10.1R *47.4+57.7R*	10.1+9.0R *57.7+51.4R*	
	TSW @ 24"	q	1100 *16.05*	930 *13.57*	860 *12.55*	810 *11.82*	780 *11.38*	720 *10.51*
		F	7.3 *41.7*	8.7 *49.7*	9.8 *56.0*	10.7 *61.1*	11.7 *66.8*	12.5 *71.4*
	TSW @ 12"	q	1340 *19.56*	1250 *18.24*	1200 *17.51*	1180 *17.22*	1170 *17.07*	1120 *16.35*
		F	6.4 *36.5*	7.1 *40.5*	7.6 *43.4*	8.1 *46.3*	8.5 *48.5*	8.9 *50.8*
18	BP @ 24"	q	1200 *17.51*	970 *14.16*	840 *12.26*	740 *10.80*	660 *9.63*	600 *8.76*
		F	4.2+6.6R *24.0+37.7R*	5.3+5.7R *30.3+32.5R*	6.8+4.9R *38.8+28.0R*	8.7+4.3R *49.7+24.6R*	10.9+3.8R *62.2+21.7R*	13.6+3.4R *77.7+19.4R*
	BP @ 12"	q	1270 *18.53*	1050 *15.32*	910 *13.28*	800 *11.68*	720 *10.51*	660 *9.63*
		F	4.1+6.6R *23.4+37.7R*	5.0+5.7R *28.6+32.5R*	6.4+4.9R *36.5+28.0R*	8.1+4.3R *46.3+24.6R*	10.2+3.8R *58.2+21.7R*	12.6+3.4R *71.9+19.4R*
	TSW @ 24"	q	1420 *20.72*	1200 *17.51*	1100 *16.05*	1040 *15.18*	1000 *14.59*	970 *14.16*
		F	5.0 *28.6*	6.0 *34.3*	6.8 *38.8*	7.6 *43.4*	8.3 *47.4*	8.9 *50.8*
	TSW @ 12"	q	1690 *24.66*	1560 *22.77*	1500 *21.89*	1470 *21.45*	1460 *21.31*	1470 *21.45*
		F	4.5 *25.7*	5.0 *28.6*	5.5 *31.4*	5.8 *33.1*	6.2 *35.4*	6.5 *37.1*
16	BP @ 24"	q	1140 *16.64*	1200 *17.51*	1030 *15.03*	910 *13.28*	810 *11.82*	730 *10.65*
		F	3.9+3.5R *22.3+20.0R*	5.0+2.9R *28.6+16.6R*	6.5+2.5R *37.1+14.3R*	8.5+2.2R *48.5+12.6R*	10.8+1.9R *61.7+10.8R*	13.5+1.8R *77.1+10.3R*
	BP @ 12"	q	1540 *22.47*	1270 *18.53*	1100 *16.05*	970 *14.16*	870 *12.70*	780 *11.38*
		F	3.8+3.5R *21.7+20.0R*	4.8+2.9R *27.4+16.6R*	6.2+2.5R *35.4+14.3R*	8.0+2.2R *45.7+12.6R*	10.2+1.9R *58.2+10.8R*	12.8+1.8R *73.1+10.3R*
	TSW @ 24"	q	1740 *25.39*	1470 *21.45*	1350 *19.70*	1270 *18.53*	1210 *17.66*	1180 *17.22*
		F	3.8 *21.7*	4.6 *26.3*	5.2 *29.7*	5.8 *33.1*	6.4 *36.5*	6.9 *39.4*
	TSW @ 12"	q	2050 *29.92*	1880 *27.44*	1800 *26.27*	1760 *25.69*	1750 *25.54*	1760 *25.69*
		F	3.5 *20.0*	3.9 *22.3*	4.2 *24.0*	4.5 *25.7*	4.8 *27.4*	5.1 *29.1*

ShearTranz element installation per details on pages 58 and 59.
BP = Button Punch; TSW = Top Seam Weld

System 80

HSB®-36 Deck with ShearTranz® System
Insulating Concrete Fill
7 Weld Pattern at Supports
Button Punch or 1½"Top Seam Weld
Galvanized

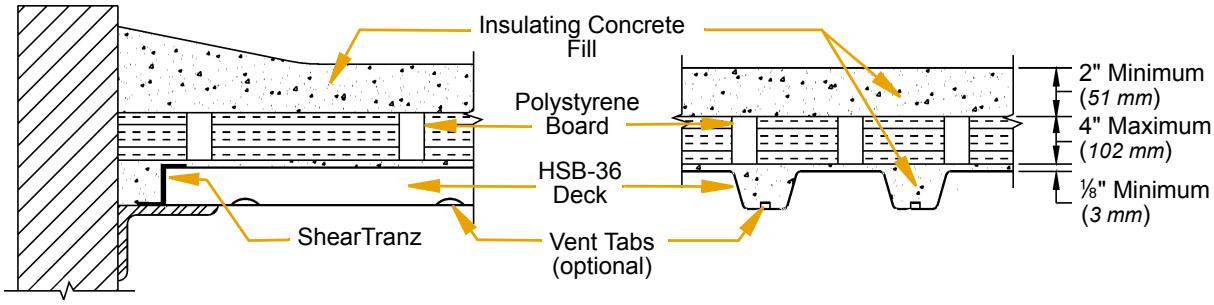

Allowable Diaphragm Shear Values, q (plf, *kN/m*) and Flexibility Factors, F ((in./lb)x10^6, (*mm/N*)x10^6)

GAGE	SIDELAP ATTACHMENT		MAXIMUM CLEAR SPAN (ft-in., *mm*) 8'-0" *2,440*	9'-0" *2,740*	10'-0" *3,050*
22	BP @ 24"	q	880 *12.84*		
		F	13.0 *74.2*		
	TSW @ 24"	q	1050 *15.32*		
		F	8.0 *45.7*		
	TSW @ 16"	q	1160 *16.93*		
		F	4.5 *25.7*		
20	BP @ 24"	q	970 *14.16*	890 *12.99*	820 *11.97*
		F	13.0 *74.2*	13.0 *74.2*	13.0 *74.2*
	TSW @ 24"	q	1290 *18.83*	1190 *17.37*	1090 *15.91*
		F	8.0 *45.7*	8.0 *45.7*	8.0 *45.7*
	TSW @ 16"	q	1430 *20.87*	1340 *19.56*	1260 *18.39*
		F	4.5 *25.7*	4.5 *25.7*	4.5 *25.7*
18	BP @ 24"	q	1030 *15.03*	990 *14.45*	960 *14.01*
		F	13.0 *74.2*	13.0 *74.2*	13.0 *74.2*
	TSW @ 24"	q	1370 *19.99*	1320 *19.26*	1280 *18.68*
		F	8.0 *45.7*	8.0 *45.7*	8.0 *45.7*
	TSW @ 16"	q	1520 *22.18*	1490 *21.74*	1480 *21.60*
		F	4.5 *25.7*	4.5 *25.7*	4.5 *25.7*

ShearTranz element installation per details on pages 58 and 59.
BP = Button Punch; TSW = Top Seam Weld

System 80 consists of galvanized HSB-36 deck and the ShearTranz system combined with insulating concrete for maximum shear capacity and outstanding insulation.

Positive venting of the HSB-36 deck is accomplished through the use of vent tabs spaced at approximately 6 in. on center in the interior bottom flanges of the deck.

ShearTranz elements are located at shear collectors perpendicular to the deck corrugations. See pages 58 and 59 for ShearTranz installation details.

Insulating concrete and polystyrene board thicknesses may be varied to provide the required U factor.

System 80 diaphragm values are based on aggregate type insulating concrete, such as Zonolite. Other aggregate type insulating concretes complying with the requirements of ICBO ES Report ER2078P may also be used.

A 2-hour fire rating is possible for System 80 with a 2-inch minimum thickness of insulating concrete and key deck mesh.

If insulating concrete material other than those specified here is used, refer to the fill manufacturer for diaphragm capacity and venting requirements. An alternative is to consider the deck alone, or deck in conjunction with a ShearTranz system for diaphragm capacity, utilizing the insulating concrete to achieve fire ratings and meet insulation requirements.

Type PLN™-24

- **4 Weld Pattern at Supports**
- **Sidelaps Connected with PunchLok® Tool**
- **Primer Painted or Galvanized**

Allowable Diaphragm Shear Values, q (plf, *kN/m*) and Flexibility Factors, F ((in./lb)x10^6, (*mm/N*)*x10*^{6})

GAGE	SIDELAP ATTACH-MENT		SPAN (ft-in., *mm*)								
			6'-0" *1,830*	7'-0" *2,130*	8'-0" *2,440*	9'-0" *2,740*	10'-0" *3,050*	11'-0" *3,350*	12'-0" *3,660*	14'-0" *4,270*	16'-0" *4,880*
22	VSC @ 24"	q	480 *7.01*	457 *6.67*	410 *5.98*	399 *5.82*	367 *5.36*	362 *5.28*	339 *4.95*	318 *4.64*	303 *4.42*
		F	20.4+51R *116.5+291R*	19.3+47R *110.2+268R*	24.3+44R *138.8+251R*	23.2+41R *132.5+234R*	27.9+39R *159.3+223R*	26.7+37R *152.5+211R*	31.2+36R *178.2+206R*	34.3+33R *195.9+188R*	37.2+31R *212.4+177R*
	VSC @ 18"	q	518 *7.56*	487 *7.11*	463 *6.76*	422 *6.16*	409 *5.97*	398 *5.81*	373 *5.44*	361 *5.27*	340 *4.96*
		F	15.0+51R *85.7+291R*	15.2+47R *86.8+268R*	15.5+44R *88.5+251R*	18.8+41R *107.4+234R*	18.9+39R *107.9+223R*	19.1+37R *109.1+211R*	22.1+36R *126.2+206R*	22.2+33R *126.8+188R*	25.0+31R *142.8+177R*
	VSC @ 12"	q	583 *8.51*	540 *7.88*	508 *7.41*	483 *7.05*	462 *6.74*	445 *6.49*	431 *6.29*	409 *5.97*	392 *5.72*
		F	10.0+51R *57.1+291R*	10.8+47R *61.7+268R*	11.5+44R *65.7+251R*	12.1+41R *69.1+234R*	12.8+39R *73.1+223R*	13.4+37R *76.5+211R*	13.9+36R *79.4+206R*	15.0+33R *85.7+188R*	16.1+31R *91.9+177R*
	VSC @ 8"	q	662 *9.66*	627 *9.15*	583 *8.51*	564 *8.23*	535 *7.81*	523 *7.63*	502 *7.33*	479 *6.99*	461 *6.73*
		F	7.0+51R *40.0+291R*	7.2+47R *41.1+268R*	7.8+44R *44.5+251R*	7.9+41R *45.1+234R*	8.5+39R *48.5+223R*	8.6+37R *49.1+211R*	9.2+36R *52.5+206R*	9.8+33R *56.0+188R*	10.3+31R *58.8+177R*
	VSC @ 6"	q	728 *10.62*	682 *9.95*	647 *9.44*	619 *9.03*	596 *8.70*	578 *8.44*	562 *8.20*	537 *7.84*	519 *7.57*
		F	5.7+51R *32.5+291R*	6.0+47R *34.3+268R*	6.2+44R *35.4+251R*	6.4+41R *36.5+234R*	6.7+39R *38.3+223R*	6.9+37R *39.4+211R*	7.1+36R *40.5+206R*	7.4+33R *42.3+188R*	7.8+31R *44.5+177R*
	VSC @ 4"	q	840 *12.26*	791 *11.54*	753 *10.99*	723 *10.55*	699 *10.20*	679 *9.91*	662 *9.66*	602 *8.79*	545 *7.95*
		F	4.5+51R *25.7+291R*	4.6+47R *26.3+268R*	4.7+44R *26.8+251R*	4.9+41R *28.0+234R*	5.0+39R *28.6+223R*	5.1+37R *29.1+211R*	5.2+36R *29.7+206R*	5.4+33R *30.8+188R*	5.6+31R *32.0+177R*
20	VSC @ 24"	q	680 *9.92*	646 *9.43*	580 *8.46*	563 *8.22*	518 *7.56*	510 *7.44*	477 *6.96*	448 *6.54*	426 *6.22*
		F	16.1+34R *91.9+194R*	15.4+31R *87.9+177R*	19.4+29R *110.8+166R*	18.5+27R *105.6+154R*	22.4+26R *127.9+148R*	21.5+25R *122.8+143R*	25.2+24R *143.9+137R*	27.8+22R *158.7+126R*	30.3+21R *173.0+120R*
	VSC @ 18"	q	733 *10.70*	687 *10.03*	652 *9.52*	595 *8.68*	576 *8.41*	560 *8.17*	525 *7.66*	507 *7.40*	477 *6.96*
		F	11.9+34R *68.0+194R*	12.1+31R *69.1+177R*	12.4+29R *70.8+166R*	15.1+27R *86.2+154R*	15.2+26R *86.8+148R*	15.4+25R *87.9+143R*	17.9+24R *102.2+137R*	18.1+22R *103.4+126R*	20.5+21R *117.1+120R*
	VSC @ 12"	q	820 *11.97*	759 *11.08*	713 *10.41*	677 *9.88*	648 *9.46*	624 *9.11*	604 *8.81*	573 *8.36*	549 *8.01*
		F	8.0+34R *45.7+194R*	8.7+31R *49.7+177R*	9.3+29R *53.1+166R*	9.8+27R *56.0+154R*	10.3+26R *58.8+148R*	10.9+25R *62.2+143R*	11.3+24R *64.5+137R*	12.3+22R *70.2+126R*	13.2+21R *75.4+120R*
	VSC @ 8"	q	927 *13.53*	877 *12.80*	815 *11.89*	787 *11.49*	747 *10.90*	730 *10.65*	701 *10.23*	668 *9.75*	644 *9.40*
		F	5.7+34R *32.5+194R*	5.8+31R *33.1+177R*	6.4+29R *36.5+166R*	6.5+27R *37.1+154R*	7.0+26R *40.0+148R*	7.0+25R *40.0+143R*	7.5+24R *42.8+137R*	8.0+22R *45.7+126R*	8.5+21R *48.5+120R*
	VSC @ 6"	q	1017 *14.84*	952 *13.89*	902 *13.16*	862 *12.58*	831 *12.13*	804 *11.73*	783 *11.43*	749 *10.93*	723 *10.55*
		F	4.6+34R *26.3+194R*	4.9+31R *28.0+177R*	5.1+29R *29.1+166R*	5.3+27R *30.3+154R*	5.4+26R *30.8+148R*	5.6+25R *32.0+143R*	5.8+24R *33.1+137R*	6.1+22R *34.8+126R*	6.4+21R *36.5+120R*
	VSC @ 4"	q	1169 *17.06*	1099 *16.04*	1046 *15.27*	1004 *14.65*	971 *14.17*	943 *13.76*	920 *13.43*	869 *12.68*	786 *11.47*
		F	3.7+34R *21.1+194R*	3.8+31R *21.7+177R*	3.9+29R *22.3+166R*	4.0+27R *22.8+154R*	4.1+26R *23.4+148R*	4.2+25R *24.0+143R*	4.3+24R *24.6+137R*	4.5+22R *25.7+126R*	4.6+21R *26.3+120R*

VSC = Verco Sidelap Connection

Type PLN™-24

- 4 Weld Pattern at Supports
- Sidelaps Connected with PunchLok® Tool
- Primer Painted or Galvanized

Allowable Diaphragm Shear Values, q (plf, *kN/m*) and Flexibility Factors, F ((in./lb)x10^6, (*mm/N*)*x10*^{6})

GAGE	SIDELAP ATTACH-MENT		SPAN (ft-in., *mm*)								
			6'-0" *1,830*	7'-0" *2,130*	8'-0" *2,440*	9'-0" *2,740*	10'-0" *3,050*	11'-0" *3,350*	12'-0" *3,660*	14'-0" *4,270*	16'-0" *4,880*
18	VSC @ 24"	q	1072 *15.64*	1016 *14.83*	913 *13.32*	885 *12.92*	816 *11.91*	802 *11.70*	752 *10.97*	707 *10.32*	674 *9.84*
		F	10.9+18R *62.2+103R*	10.5+16R *60.0+91R*	13.2+15R *75.4+86R*	12.7+14R *72.5+80R*	15.4+14R *87.9+80R*	14.8+13R *84.5+74R*	17.4+12R *99.4+69R*	19.4+12R *110.8+69R*	21.3+11R *121.6+63R*
	VSC @ 18"	q	1151 *16.80*	1079 *15.75*	1023 *14.93*	934 *13.63*	904 *13.19*	879 *12.83*	825 *12.04*	798 *11.65*	754 *11.00*
		F	8.1+18R *46.3+103R*	8.3+16R *47.4+91R*	8.6+15R *49.1+86R*	10.4+14R *59.4+80R*	10.5+14R *60.0+80R*	10.7+13R *61.1+74R*	12.5+12R *71.4+69R*	12.7+12R *72.5+69R*	14.4+11R *82.2+63R*
	VSC @ 12"	q	1284 *18.74*	1188 *17.34*	1116 *16.29*	1060 *15.47*	1015 *14.81*	978 *14.27*	948 *13.84*	900 *13.13*	865 *12.62*
		F	5.6+18R *32.0+103R*	6.0+16R *34.3+91R*	6.4+15R *36.5+86R*	6.8+14R *38.8+80R*	7.2+14R *41.1+80R*	7.6+13R *43.4+74R*	8.0+12R *45.7+69R*	8.7+12R *49.7+69R*	9.3+11R *53.1+63R*
	VSC @ 8"	q	1446 *21.10*	1367 *19.95*	1272 *18.56*	1229 *17.94*	1167 *17.03*	1141 *16.65*	1097 *16.01*	1048 *15.29*	1012 *14.77*
		F	4.0+18R *22.8+103R*	4.1+16R *23.4+91R*	4.5+15R *25.7+86R*	4.6+14R *26.3+80R*	4.9+14R *28.0+80R*	5.0+13R *28.6+74R*	5.3+12R *30.3+69R*	5.7+12R *32.5+69R*	6.1+11R *34.8+63R*
	VSC @ 6"	q	1583 *23.10*	1481 *21.61*	1404 *20.49*	1343 *19.60*	1295 *18.90*	1256 *18.33*	1224 *17.86*	1173 *17.12*	1136 *16.58*
		F	3.3+18R *18.8+103R*	3.5+16R *20.0+91R*	3.6+15R *20.6+86R*	3.8+14R *21.7+80R*	3.9+14R *22.3+80R*	4.0+13R *22.8+74R*	4.2+12R *24.0+69R*	4.4+12R *25.1+69R*	4.6+11R *26.3+63R*
	VSC @ 4"	q	1812 *26.44*	1705 *24.88*	1624 *23.70*	1561 *22.78*	1511 *22.05*	1469 *21.44*	1435 *20.94*	1383 *20.18*	1345 *19.63*
		F	2.6+18R *14.8+103R*	2.7+16R *15.4+91R*	2.8+15R *16.0+86R*	2.9+14R *16.6+80R*	3.0+14R *17.1+80R*	3.0+13R *17.1+74R*	3.1+12R *17.7+69R*	3.2+12R *18.3+69R*	3.4+11R *19.4+63R*
16	VSC @ 24"	q	1439 *21.00*	1364 *19.91*	1227 *17.91*	1192 *17.40*	1101 *16.07*	1084 *15.82*	1017 *14.84*	959 *14.00*	916 *13.37*
		F	7.9+11R *45.1+63R*	7.7+10R *44.0+57R*	9.7+9R *55.4+51R*	9.4+9R *53.7+51R*	11.3+8R *64.5+46R*	11.0+8R *62.8+46R*	12.9+8R *73.7+46R*	14.4+7R *82.2+40R*	15.8+7R *90.2+40R*
	VSC @ 18"	q	1544 *22.53*	1448 *21.13*	1375 *20.07*	1257 *18.34*	1219 *17.79*	1187 *17.32*	1116 *16.29*	1083 *15.81*	1025 *14.96*
		F	6.0+11R *34.3+63R*	6.1+10R *34.8+57R*	6.3+9R *36.0+51R*	7.7+9R *44.0+51R*	7.8+8R *44.5+46R*	7.9+8R *45.1+46R*	9.2+8R *52.5+46R*	9.4+7R *53.7+40R*	10.8+7R *61.7+40R*
	VSC @ 12"	q	1720 *25.10*	1594 *23.26*	1500 *21.89*	1426 *20.81*	1368 *19.96*	1321 *19.28*	1282 *18.71*	1221 *17.82*	1178 *17.19*
		F	4.1+11R *23.4+63R*	4.5+10R *25.7+57R*	4.8+9R *27.4+51R*	5.1+9R *29.1+51R*	5.4+8R *30.8+46R*	5.7+8R *32.5+46R*	6.0+8R *34.3+46R*	6.5+7R *37.1+40R*	7.0+7R *40.0+40R*
	VSC @ 8"	q	1937 *28.27*	1834 *26.77*	1709 *24.94*	1654 *24.14*	1573 *22.96*	1541 *22.49*	1484 *21.66*	1423 *20.77*	1378 *20.11*
		F	3.0+11R *17.1+63R*	3.1+10R *17.7+57R*	3.4+9R *19.4+51R*	3.4+9R *19.4+51R*	3.7+8R *21.1+46R*	3.8+8R *21.7+46R*	4.0+8R *22.8+46R*	4.3+7R *24.6+40R*	4.6+7R *26.3+40R*
	VSC @ 6"	q	2119 *30.92*	1985 *28.97*	1885 *27.51*	1808 *26.39*	1746 *25.48*	1696 *24.75*	1655 *24.15*	1593 *23.25*	1547 *22.58*
		F	2.5+11R *14.3+63R*	2.6+10R *14.8+57R*	2.7+9R *15.4+51R*	2.9+9R *16.6+51R*	3.0+8R *17.1+46R*	3.1+8R *17.7+46R*	3.2+8R *18.3+46R*	3.3+7R *18.8+40R*	3.5+7R *20.0+40R*
	VSC @ 4"	q	2424 *35.38*	2285 *33.35*	2181 *31.83*	2100 *30.65*	2036 *29.71*	1985 *28.97*	1942 *28.34*	1877 *27.39*	1831 *26.72*
		F	2.0+11R *11.4+63R*	2.1+10R *12.0+57R*	2.2+9R *12.6+51R*	2.2+9R *12.6+51R*	2.3+8R *13.1+46R*	2.3+8R *13.1+46R*	2.4+8R *13.7+46R*	2.5+7R *14.3+40R*	2.6+7R *14.8+40R*

VSC = Verco Sidelap Connection

Type N-24

- **4 Weld Pattern at Supports**
- **Button Punch or 1½" Top Seam Weld**
- **Primer Painted or Galvanized**

Allowable Diaphragm Shear Values, q (plf, *kN/m*) and Flexibility Factors, F ((in./lb)x10^6, (*mm/N*)*x10*^{6})

GAGE	SIDELAP ATTACH-MENT		SPAN (ft-in., *mm*)								
			6'-0" *1,830*	7'-0" *2,130*	8'-0" *2,440*	9'-0" *2,740*	10'-0" *3,050*	11'-0" *3,350*	12'-0" *3,660*	14'-0" *4,270*	16'-0" *4,880*
22	BP @ 24"	q	234 *3.41*	216 *3.15*	189 *2.76*	180 *2.63*	163 *2.38*	158 *2.31*	145 *2.12*	130 *1.90*	119 *1.74*
		F	21.3+166R *121.6+948R*	23.3+143R *133.0+817R*	26.7+125R *152.5+714R*	28.4+111R *162.2+634R*	31.8+100R *181.6+571R*	33.2+91R *189.6+520R*	36.6+83R *209.0+474R*	41.1+71R *234.7+405R*	45.4+62R *259.2+354R*
	BP @ 12"	q	285 *4.16*	260 *3.79*	241 *3.52*	227 *3.31*	216 *3.15*	207 *3.02*	198 *2.89*	184 *2.69*	173 *2.52*
		F	18.0+166R *102.8+948R*	19.8+143R *113.1+817R*	21.5+125R *122.8+714R*	23.1+111R *131.9+634R*	24.6+100R *140.5+571R*	26.1+91R *149.0+520R*	27.4+83R *156.5+474R*	29.9+71R *170.7+405R*	32.1+62R *183.3+354R*
	TSW @ 24"	q	234 *3.41*	231 *3.37*	201 *2.93*	202 *2.95*	181 *2.64*	183 *2.67*	167 *2.44*	158 *2.31*	151 *2.20*
		F	15.5+166R *88.5+948R*	13.9+143R *79.4+817R*	14.1+125R *80.5+714R*	12.9+111R *73.7+634R*	13.1+100R *74.8+571R*	12.1+91R *69.1+520R*	12.2+83R *69.7+474R*	11.5+71R *65.7+405R*	11.0+62R *62.8+354R*
	TSW @ 12"	q	343 *5.01*	324 *4.73*	309 *4.51*	298 *4.35*	289 *4.22*	282 *4.12*	276 *4.03*	267 *3.90*	260 *3.79*
		F	11.4+166R *65.1+948R*	10.7+143R *61.1+817R*	10.1+125R *57.7+714R*	9.6+111R *54.8+634R*	9.2+100R *52.5+571R*	8.8+91R *50.2+520R*	8.5+83R *48.5+474R*	8.0+71R *45.7+405R*	7.5+62R *42.8+354R*
20	BP @ 24"	q	355 *5.18*	323 *4.71*	283 *4.13*	266 *3.88*	240 *3.50*	231 *3.37*	212 *3.09*	189 *2.76*	171 *2.50*
		F	16.3+96R *93.1+548R*	18.2+82R *103.9+468R*	20.9+72R *119.3+411R*	22.5+64R *128.5+365R*	25.3+58R *144.5+331R*	26.8+52R *153.0+297R*	29.6+48R *169.0+274R*	33.8+41R *193.0+234R*	37.8+36R *215.9+206R*
	BP @ 12"	q	415 *6.06*	374 *5.46*	344 *5.02*	321 *4.68*	303 *4.42*	289 *4.22*	277 *4.04*	253 *3.69*	235 *3.43*
		F	14.3+96R *81.7+548R*	16.0+82R *91.4+468R*	17.6+72R *100.5+411R*	19.1+64R *109.1+365R*	20.5+58R *117.1+331R*	21.9+52R *125.1+297R*	23.2+48R *132.5+274R*	25.7+41R *146.8+234R*	28.1+36R *160.5+206R*
	TSW @ 24"	q	384 *5.60*	371 *5.41*	322 *4.70*	320 *4.67*	286 *4.17*	287 *4.19*	262 *3.82*	245 *3.58*	232 *3.39*
		F	12.3+96R *70.2+548R*	11.3+82R *64.5+468R*	11.5+72R *65.7+411R*	10.6+64R *60.5+365R*	10.8+58R *61.7+331R*	10.1+52R *57.7+297R*	10.2+48R *58.2+274R*	9.7+41R *55.4+234R*	9.3+36R *53.1+206R*
	TSW @ 12"	q	540 *7.88*	505 *7.37*	479 *6.99*	459 *6.70*	443 *6.47*	429 *6.26*	418 *6.10*	401 *5.85*	389 *5.68*
		F	9.4+96R *53.7+548R*	8.9+82R *50.8+468R*	8.5+72R *48.5+411R*	8.1+64R *46.3+365R*	7.8+58R *44.5+331R*	7.5+52R *42.8+297R*	7.2+48R *41.1+274R*	6.8+41R *38.8+234R*	6.5+36R *37.1+206R*
18	BP @ 24"	q	637 *9.30*	568 *8.29*	498 *7.27*	461 *6.73*	416 *6.07*	394 *5.75*	362 *5.28*	324 *4.73*	296 *4.32*
		F	10.6+41R *60.5+234R*	12.0+35R *68.5+200R*	13.8+31R *78.8+177R*	15.2+27R *86.8+154R*	17.1+24R *97.6+137R*	18.5+22R *105.6+126R*	20.5+20R *117.1+114R*	23.9+17R *136.5+97R*	27.3+15R *155.9+86R*
	BP @ 12"	q	710 *10.36*	632 *9.22*	574 *8.38*	530 *7.73*	494 *7.21*	466 *6.80*	443 *6.47*	407 *5.94*	381 *5.56*
		F	9.7+41R *55.4+234R*	11.0+35R *62.8+200R*	12.2+31R *69.7+177R*	13.5+27R *77.1+154R*	14.7+24R *83.9+137R*	15.9+22R *90.8+126R*	17.1+20R *97.6+114R*	19.4+17R *110.8+97R*	21.6+15R *123.3+86R*
	TSW @ 24"	q	819 *11.95*	773 *11.28*	670 *9.78*	652 *9.52*	582 *8.49*	576 *8.41*	524 *7.65*	483 *7.05*	453 *6.61*
		F	8.4+41R *48.0+234R*	7.9+35R *45.1+200R*	8.0+31R *45.7+177R*	7.6+27R *43.4+154R*	7.7+24R *44.0+137R*	7.3+22R *41.7+126R*	7.4+20R *42.3+114R*	7.2+17R *41.1+97R*	6.9+15R *39.4+86R*
	TSW @ 12"	q	1096 *15.99*	1011 *14.75*	948 *13.84*	899 *13.12*	860 *12.55*	828 *12.08*	802 *11.70*	761 *11.11*	730 *10.65*
		F	6.7+41R *38.3+234R*	6.4+35R *36.5+200R*	6.2+31R *35.4+177R*	6.0+27R *34.3+154R*	5.8+24R *33.1+137R*	5.6+22R *32.0+126R*	5.5+20R *31.4+114R*	5.2+17R *29.7+97R*	5.0+15R *28.6+86R*

BP = Button Punch; TSW = Top Seam Weld

Type N-24

- 4 Weld Pattern at Supports
- Button Punch or 1½" Top Seam Weld
- Primer Painted or Galvanized

Allowable Diaphragm Shear Values, q (plf, *kN/m*) and Flexibility Factors, F ((in./lb)x10^6, (*mm/N*)*x10*^{6})

GAGE	SIDELAP ATTACH-MENT		SPAN (ft-in., *mm*)								
			6'-0" *1,830*	7'-0" *2,130*	8'-0" *2,440*	9'-0" *2,740*	10'-0" *3,050*	11'-0" *3,350*	12'-0" *3,660*	14'-0" *4,270*	16'-0" *4,880*
16	BP @ 24"	q	918 *13.40*	812 *11.85*	712 *10.39*	654 *9.54*	590 *8.61*	554 *8.09*	509 *7.43*	453 *6.61*	411 *6.00*
		F	7.5+21R *42.8+120R*	8.6+18R *49.1+103R*	9.9+16R *56.5+91R*	11.0+14R *62.8+80R*	12.5+12R *71.4+69R*	13.6+11R *77.7+63R*	15.1+10R *86.2+57R*	17.9+9R *102.2+51R*	20.7+8R *118.2+46R*
	BP @ 12"	q	1000 *14.59*	884 *12.90*	797 *11.63*	731 *10.67*	678 *9.89*	636 *9.28*	601 *8.77*	547 *7.98*	508 *7.41*
		F	7.0+21R *40.0+120R*	8.0+18R *45.7+103R*	9.0+16R *51.4+91R*	10.0+14R *57.1+80R*	11.0+12R *62.8+69R*	12.0+11R *68.5+63R*	13.0+10R *74.2+57R*	15.0+9R *85.7+51R*	17.0+8R *97.1+46R*
	TSW @ 24"	q	1197 *17.47*	1137 *16.59*	1002 *14.62*	982 *14.33*	891 *13.00*	888 *12.96*	821 *11.98*	774 *11.30*	742 *10.83*
		F	6.1+21R *34.8+120R*	5.8+18R *33.1+103R*	5.9+16R *33.7+91R*	5.7+14R *32.5+80R*	5.8+12R *33.1+69R*	5.6+11R *32.0+63R*	5.7+10R *32.5+57R*	5.5+9R *31.4+51R*	5.4+8R *30.8+46R*
	TSW @ 12"	q	1558 *22.74*	1453 *21.20*	1378 *20.11*	1322 *19.29*	1280 *18.68*	1248 *18.21*	1223 *17.85*	1190 *17.37*	1170 *17.07*
		F	5.0+21R *28.6+120R*	4.8+18R *27.4+103R*	4.7+16R *26.8+91R*	4.6+14R *26.3+80R*	4.5+12R *25.7+69R*	4.4+11R *25.1+63R*	4.3+10R *24.6+57*	4.1+9R *23.4+51R*	3.9+8R *22.3+46R*

BP = Button Punch; TSW = Top Seam Weld

ShearTranz® with Type N-24 Deck

- 4 Weld Pattern at Supports
- 1½" Top Seam Weld
- Primer Painted or Galvanized

Allowable Diaphragm Shear Values, q (plf, *kN/m*) and Flexibility Factors, F ((in./lb)x10^6, (*mm/N*)*x10*^{6})

GAGE	SIDELAP ATTACH-MENT		SPAN (ft-in., *mm*)									
			END LAP NOT WELDED					END LAP WELDED WITH 1 in. (*25 mm*) FILLET WELD ON TOP FLUTES				
			6'-0" *1,830*	8'-0" *2,440*	10'-0" *3,050*	12'-0" *3,660*	14'-0" *4,270*	6'-0" *1,830*	8'-0" *2,440*	10'-0" *3,050*	12'-0" *3,660*	14'-0" *4,270*
22	TSW @ 12"	q	620 *9.05*	620 *9.05*	540 *7.88*	450 *6.57*	380 *5.55*	750 *10.95*	670 *9.78*	540 *7.88*	450 *6.57*	380 *5.55*
		F	11.5 *65.7*	12.2 *69.7*	12.6 *71.9*	12.9 *73.7*	13.1 *74.8*	11.5 *65.7*	12.2 *69.7*	12.6 *71.9*	12.9 *73.7*	13.1 *74.8*
20	TSW @ 12"	q	750 *10.95*	750 *10.95*	650 *9.49*	540 *7.88*	460 *6.71*	1020 *14.89*	810 *11.82*	650 *9.49*	540 *7.88*	460 *6.71*
		F	9.2 *52.5*	9.8 *56.0*	10.3 *58.8*	10.6 *60.5*	10.8 *61.7*	9.2 *52.5*	9.8 *56.0*	10.3 *58.8*	10.6 *60.5*	10.8 *61.7*
18	TSW @ 12"	q	1000 *14.59*	1000 *14.59*	Use N Deck Values			1430 *20.87*	1080 *15.76*	Use N Deck Values		
		F	6.5 *37.1*	7.0 *40.0*				6.5 *37.1*	7.0 *40.0*			

ShearTranz element installation per details on pages 58 and 59.
TSW = Top Seam Weld

PLN™/N WELDS

DEEP VERCOR™ DECK TECHNICAL DATA

Material

Deep VERCOR™ deck is fabricated from G90 (*Z275*) galvanized steel, conforming to ASTM Designation A653 SS, Grade 80.

Uniform Load Tables

The table on page 73 lists the allowable uniform load. This is the total uniform load which can be applied to the Deep VERCOR deck. Values are based on the allowable bending stress and limiting deflection to L/240. Stress is limited to 36,000 psi (*248,211 kPa*). The symbol ✦✦✦ indicates that the allowable uniform load based on deflection exceeds the allowable load based on stress.

Refer to page 5 for the formulas used to determine the allowable uniform loads due to stress and deflection.

Diaphragms with Deep VERCOR™ Deck

Diaphragm values for Deep VERCOR deck attached to the supports with screws, without concrete are shown pages 74 and 75. See pages 76–78 for diaphragm values for Deep VERCOR deck welded to the supports with insulating concrete fill. The attachment patterns for each system are shown in the illustrations included with the tables.

- Diaphragm shear strengths (q) are the allowable strengths and are not to be increased one-third.
- The flexibility factor (F) is the number of microinches a diaphragm web will deflect in a span of 1 ft (*305 mm*) under a shear load of 1 pound per ft (*14.6 N/m*).
- R is the vertical load span (spacing between supports) (L_V) of the deck divided by the length (L_S) of the deck sheet: $R = L_V / L_S$.
- The flexibility limitations in ICBO ES Report ER-2078P may be used as a guide instead of a rational analysis of the anticipated deflections.

Deep VERCOR™ Deck Attached with Screws

Support Attachment: Attach Deep VERCOR deck to the supports with ITW Buildex TEKS (or TRAXX) self-drilling, self-tapping screws as shown in Figure 12. Select the appropriate screw based on the thickness of the substrate as shown in Table 10. See pages 74 and 75 for diaphragm values.

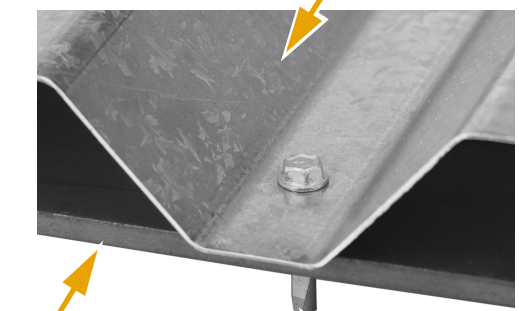

FIGURE 12

Table 10: ITW Buildex Screw Selection

Support Thickness	Fastener Designation
16 gage to 3⁄16 inch (*1.5 mm to 4.8 mm*)	#12-14 x ¾" TEKS 3 (or TRAXX 3)
⅛ inch to ¼ inch (*3.2 mm to 6.4 mm*)	#12-24 x ⅞" TEKS 4 (or TRAXX 4)
⅛ inch to ½ inch (*3.2 mm to 12.7 mm*)	#12-24 x 1¼" TEKS 5 (or TRAXX 5)

Sidelap Connections: Fasten sidelaps of Deep VERCOR deck with ITW Buildex #12-14 x ¾" TEKS 1 (or TRAXX 1) self-drilling, self-tapping screws at spacings indicated. The dimension from the centerline of the supports to the first and last sidelap connection within each span is to be no more than the specified spacing.

Parallel Collectors: Spacing of screws at shear collectors parallel to the corrugations of the deck is to be based on the shear strength per screw for the gage of deck selected. See Table 10. The maximum spacing of attachments at parallel collectors is 3 ft (*914 mm*).

Table 10: Allowable Shear Strength per Screw

Deck Gage	lb	*N*
26	226	*1006*
24	295	*1311*
22	364	*1620*
20	434	*1930*

Wind Uplift: Determine allowable spans to resist uplift forces based on the deck section properties and material strengths. Evaluation may be warranted on specific projects.

See ICBO ES Report ER-2078P for allowable tension strength of ITW Buildex fasteners.

Deep VERCOR™ Deck with Insulating Fill

Support Attachment - Welds: Attach galvanized Deep VERCOR deck and Deep VERCOR VENTLOK deck with insulating concrete fill to the supports with welds through weld washers as shown in Figure 13.

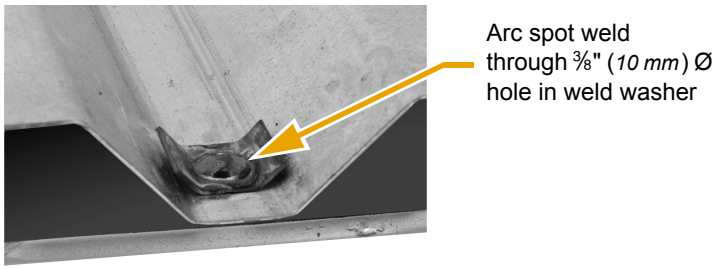

FIGURE 13

Weld patterns perpendicular to the corrugations are described with two digits (x-y). The first digit (x) is the weld pattern at the exterior of the diaphragm and at lines of interior shear collectors. The second digit (y) is the weld pattern at all other supports.

Weld Washers: Weld washers are required at all welds (see Figure 14). When anchor weld washers are required, provide a No. 3 rebar continuous at exterior boundaries of the diaphragm that are perpendicular to the corrugations.

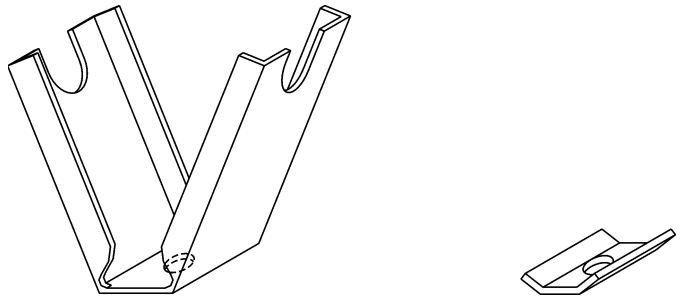

Anchor Weld Washer
16 Gage with 7/16" (*11 mm*) Hole

Standard Weld Washer
14 Gage with 3/8" (*10 mm*) Hole

FIGURE 14

Sidelap Connections: No sidelap attachment between supports is required.

Parallel Collectors: Spacing of welds with weld washers at shear collectors parallel to the corrugations of the deck is to be based on a shear capacity of 800 lb (*3.56 kN*) per connection.

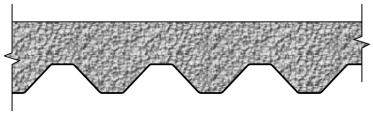

Insulating Concrete Fill: Insulating concrete fill must have a minimum 2 inch (*51 mm*) depth above the top flute of the Deep VERCOR or Deep VERCOR VENTLOK deck. The aggregate type insulating concrete fill is to conform to the specifications listed in ICBO ES Report ER-2078P.

Refer to the literature of the insulating fill manufacturer for diaphragm load values and venting requirements for deck. This is necessary for systems which use insulating fill other than as described or for systems which include polystyrene board.

Wire Mesh: If mesh is specified, it is to be 2 inch (*51 mm*) hexagonal mesh woven from 19 gage galvanized wire with longitudinal 16 gage galvanized wire spaced 3½ in. (*89 mm*) on center.

Wind Uplift: Determine tension strength of arc spot welds in accordance with the AISI "Specification for the Design of Cold-Formed Steel Structural Members."

Deep VERCOR™ Venting

Deep VERCOR deck has two venting options as shown in Figure 15. It is available with rolled-in sidelap vents on both edges of the sheets. Sidelap vents are spaced at approximately 10 inches (*254 mm*) on center.

Deep VERCOR is also available with VENTLOK louvers in the webs of the deck.

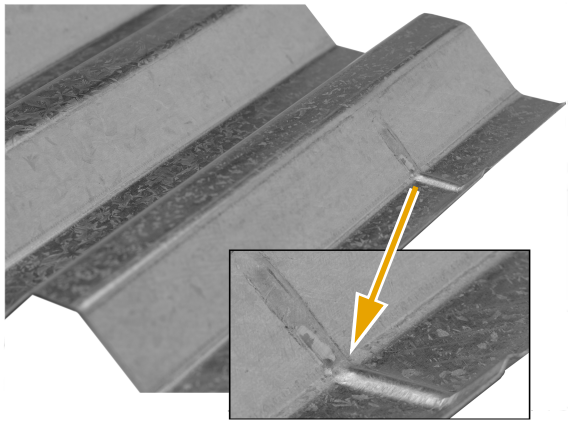

Typical Sidelap Vent

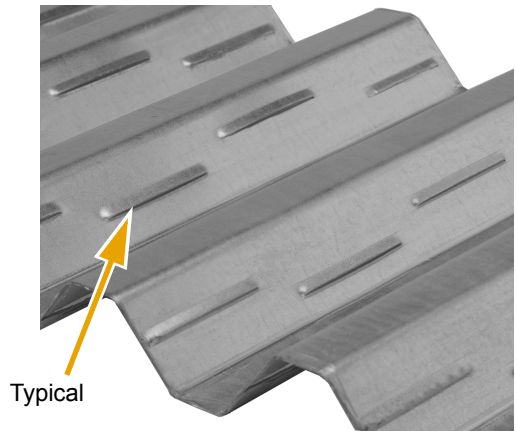

Deep VERCOR VENTLOK

FIGURE 15

Deep VERCOR™ Accessories

Neoprene Closures:

- Continuous strip 1 inch (*25 mm*) thick.
- Underside or Topside

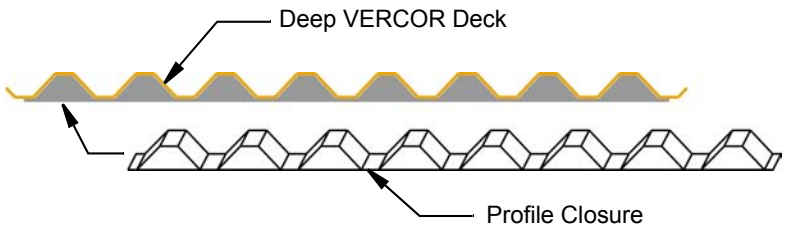

FIGURE 16

Deep VERCOR™

- **1 5/16" (*33 mm*) Deep Deck**
- **Galvanized**

Dimensions

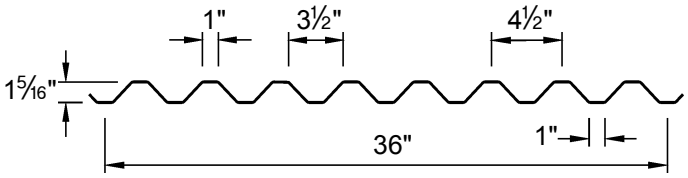

Deck Weights and Section Properties Table Notes:

1. Bending Stress is limited to 36,000 psi (*248,211 kPa*).
2. Reduce values by 6% for Deep VERCOR VENTLOK.
3. 26 gage Deep VERCOR VENTLOK not available.

Deck Weight and Section Properties

	Weight (psf, *N/m²*)	Properties per ft (*m*) of Width		
Gage	**Galv** G90 *Z275*	**I** in.⁴ *mm⁴*	**+S** in.³ *mm³*	**–S** in.³ *mm³*
26	1.1 *52.7*	0.073 *99,688*	0.099 *5,323*	0.103 *5,538*
24	1.4 *67.0*	0.098 *133,828*	0.138 *7,419*	0.140 *7,527*
22	1.7 *81.4*	0.123 *167,967*	0.175 *9,409*	0.174 *9,355*
20	2.1 *100.5*	0.143 *195,279*	0.207 *11,129*	0.206 *11,075*

Attachment Patterns – Screws

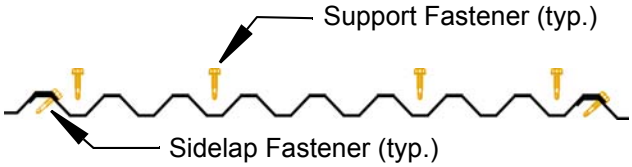

36/4 Pattern – Inverted Position

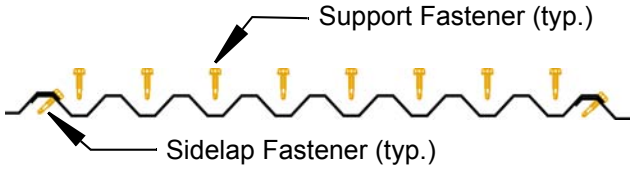

36/8 Pattern – Inverted Position

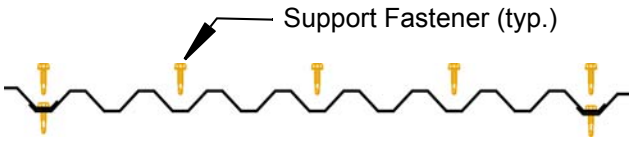

36/5 Pattern – Normal Position

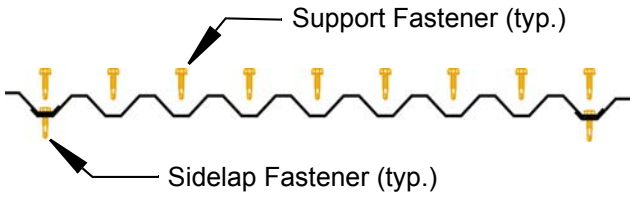

36/9 Pattern – Normal Position

Attachment Patterns – Welds

Weld Pattern 2

Weld Pattern 3

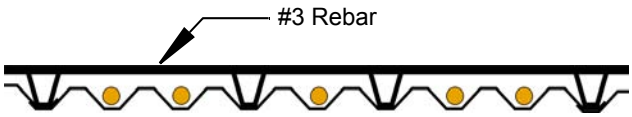

Weld Pattern 5

● = Weld with 14 gage standard weld washer

V = Weld with 16 gage anchor weld washer

Metric Conversions			
1"	*25 mm*	4½"	*114 mm*
1 5/16"	*33 mm*	36"	*914 mm*
3½"	*89 mm*		

Deep VERCOR™

1 5/16" (*33 mm*) Deep Deck
Galvanized

ALLOWABLE UNIFORM LOADS (psf, *N/m²*)

SPAN	GAGE		SPAN (ft-in., *mm*)														
			3'-0" *910*	3'-6" *1,070*	4'-0" *1,220*	4'-6" *1,370*	5'-0" *1,520*	5'-6" *1,680*	6'-0" *1,830*	6'-6" *1,980*	7'-0" *2,130*	7'-6" *2,290*	8'-0" *2,440*	8'-6" *2,590*	9'-0" *2,740*	9'-6" *2,900*	10'-0" *3,050*
SINGLE	26	STRESS	264 *12,640*	194 *9,289*	149 *7,134*	117 *5,602*	95 *4,549*	79 *3,783*	66 *3,160*	56 *2,681*	48 *2,298*	42 *2,011*					
		L/240	178 *8,523*	112 *5,363*	75 *3,591*	53 *2,538*	38 *1,819*	29 *1,389*	22 *1,053*	17 *814*	14 *670*	11 *527*					
	24	STRESS	300 *14,364*	270 *12,928*	207 *9,911*	164 *7,852*	132 *6,320*	109 *5,219*	92 *4,405*	78 *3,735*	68 *3,256*	59 *2,825*	52 *2,490*				
		L/240	238 *11,396*	150 *7,182*	101 *4,836*	71 *3,399*	51 *2,442*	39 *1,867*	30 *1,436*	23 *1,101*	19 *910*	15 *718*	13 *622*				
	22	STRESS	300 *14,364*	300 *14,364*	263 *12,593*	207 *9,911*	168 *8,044*	139 *6,655*	117 *5,602*	99 *4,740*	86 *4,118*	75 *3,591*	66 *3,160*	58 *2,777*	52 *2,490*		
		L/240	299 *14,316*	188 *9,001*	126 *6,033*	89 *4,261*	65 *3,112*	49 *2,346*	37 *1,772*	29 *1,389*	24 *1,149*	19 *910*	16 *766*	13 *622*	11 *527*		
	20	STRESS	300 *14,364*	300 *14,364*	300 *14,364*	245 *11,731*	199 *9,528*	164 *7,852*	138 *6,607*	118 *5,650*	101 *4,836*	88 *4,213*	78 *3,735*	69 *3,304*	61 *2,921*	55 *2,633*	
		L/240	✦✦✦	219 *10,486*	147 *7,038*	103 *4,932*	75 *3,591*	56 *2,681*	43 *2,059*	34 *1,628*	27 *1,293*	22 *1,053*	18 *862*	15 *718*	13 *622*	11 *527*	
DOUBLE	26	STRESS	275 *13,167*	202 *9,672*	155 *7,421*	122 *5,841*	99 *4,740*	82 *3,926*	69 *3,304*	59 *2,825*	50 *2,394*	44 *2,107*	39 *1,867*	34 *1,628*	31 *1,484*	27 *1,293*	
		L/240	✦✦✦	✦✦✦	✦✦✦	✦✦✦	92 *4,405*	69 *3,304*	53 *2,538*	42 *2,011*	34 *1,628*	27 *1,293*	23 *1,101*	19 *910*	16 *766*	13 *622*	
	24	STRESS	300 *14,364*	274 *13,119*	210 *10,055*	166 *7,948*	134 *6,416*	111 *5,315*	93 *4,453*	80 *3,830*	69 *3,304*	60 *2,873*	53 *2,538*	47 *2,250*	41 *1,963*	37 *1,772*	34 *1,628*
		L/240	✦✦✦	✦✦✦	✦✦✦	✦✦✦	124 *5,937*	93 *4,453*	72 *3,447*	56 *2,681*	45 *2,155*	37 *1,772*	30 *1,436*	25 *1,197*	21 *1,005*	18 *862*	15 *718*
	22	STRESS	300 *14,364*	300 *14,364*	261 *12,497*	206 *9,863*	167 *7,996*	138 *6,607*	116 *5,554*	99 *4,740*	85 *4,070*	74 *3,543*	65 *3,112*	58 *2,777*	52 *2,490*	46 *2,202*	42 *2,011*
		L/240	✦✦✦	✦✦✦	✦✦✦	✦✦✦	156 *7,469*	117 *5,602*	90 *4,309*	71 *3,399*	57 *2,729*	46 *2,202*	38 *1,819*	32 *1,532*	27 *1,293*	23 *1,101*	19 *910*
	20	STRESS	300 *14,364*	300 *14,364*	300 *14,364*	244 *11,683*	198 *9,480*	163 *7,804*	137 *6,560*	117 *5,602*	101 *4,836*	88 *4,213*	77 *3,687*	68 *3,256*	61 *2,921*	55 *2,633*	49 *2,346*
		L/240	✦✦✦	✦✦✦	✦✦✦	✦✦✦	181 *8,666*	136 *6,512*	105 *5,027*	82 *3,926*	66 *3,160*	54 *2,586*	44 *2,107*	37 *1,772*	31 *1,484*	26 *1,245*	23 *1,101*
TRIPLE	26	STRESS	300 *14,364*	252 *12,066*	193 *9,241*	153 *7,326*	124 *5,937*	102 *4,884*	86 *4,118*	73 *3,495*	63 *3,016*	55 *2,633*	48 *2,298*	43 *2,059*	38 *1,819*	34 *1,628*	31 *1,484*
		L/240	✦✦✦	211 *10,103*	141 *6,751*	99 *4,740*	72 *3,447*	54 *2,586*	42 *2,011*	33 *1,580*	26 *1,245*	21 *1,005*	18 *862*	15 *718*	12 *575*	11 *527*	9 *431*
	24	STRESS	300 *14,364*	300 *14,364*	263 *12,593*	207 *9,911*	168 *8,044*	139 *6,655*	117 *5,602*	99 *4,740*	86 *4,118*	75 *3,591*	66 *3,160*	58 *2,777*	52 *2,490*	47 *2,250*	42 *2,011*
		L/240	✦✦✦	283 *13,550*	189 *9,049*	133 *6,368*	97 *4,644*	73 *3,495*	56 *2,681*	44 *2,107*	35 *1,676*	29 *1,389*	24 *1,149*	20 *958*	17 *814*	14 *670*	12 *575*
	22	STRESS	300 *14,364*	300 *14,364*	300 *14,364*	258 *12,353*	209 *10,007*	173 *8,283*	145 *6,943*	124 *5,937*	107 *5,123*	93 *4,453*	82 *3,926*	72 *3,447*	64 *3,064*	58 *2,777*	52 *2,490*
		L/240	✦✦✦	✦✦✦	238 *11,396*	167 *7,996*	122 *5,841*	91 *4,357*	70 *3,352*	55 *2,633*	44 *2,107*	36 *1,724*	30 *1,436*	25 *1,197*	21 *1,005*	18 *862*	15 *718*
	20	STRESS	300 *14,364*	300 *14,364*	300 *14,364*	300 *14,364*	247 *11,826*	204 *9,768*	172 *8,235*	146 *6,991*	126 *6,033*	110 *5,267*	97 *4,644*	86 *4,118*	76 *3,639*	68 *3,256*	62 *2,969*
		L/240	✦✦✦	✦✦✦	276 *13,215*	194 *9,289*	142 *6,799*	106 *5,075*	82 *3,926*	64 *3,064*	52 *2,490*	42 *2,011*	35 *1,676*	29 *1,389*	24 *1,149*	21 *1,005*	18 *862*

Reduce values by 6% for Deep VERCOR VENTLOK.
26 gage Deep VERCOR VENTLOK not available.

Deep VERCOR™

- 1 5/16" (*33 mm*) Deep Deck
- Inverted or Normal Position
- 36/4 (36/5) TEKS Screw Pattern at Supports
- Galvanized

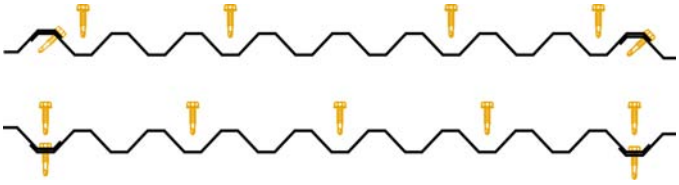

Allowable Diaphragm Shear Values, q (plf, *kN/m*) and Flexibility Factors, F ((in./lb)x10^6, (*mm/N*)*x10*^{6})

GAGE	SIDELAP ATTACH-MENT		SPAN (ft-in., *mm*) 4'-0" *1,220*	5'-0" *1,520*	6'-0" *1,830*	7'-0" *2,130*	8'-0" *2,440*	9'-0" *2,740*	10'-0" *3,050*
26	TEKS @ 24"	q	100 *1.46*	103 *1.50*	105 *1.53*	106 *1.55*	107 *1.56*	107 *1.56*	108 *1.58*
		F	19.4+265.9R *110.8+1,518.3R*	16.6+212.7R *94.8+1,214.5R*	14.9+177.3R *85.1+1,012.4R*	13.6+151.9R *77.7+867.4R*	12.7+132.9R *72.5+758.9R*	12.0+118.2R *68.5+674.9R*	11.5+106.4R *65.7+607.6R*
	TEKS @ 18"	q	139 *2.03*	141 *2.06*	143 *2.09*	144 *2.10*	145 *2.12*	146 *2.13*	146 *2.13*
		F	15.8+265.9R *90.2+1,518.3R*	13.9+212.7R *79.4+1,214.5R*	12.6+177.3R *71.9+1,012.4R*	11.7+151.9R *66.8+867.4R*	11.1+132.9R *63.4+758.9R*	10.6+118.2R *60.5+674.9R*	10.2+106.4R *58.2+607.6R*
	TEKS @ 12"	q	215 *3.14*	218 *3.18*	219 *3.20*	220 *3.21*	221 *3.23*	222 *3.24*	223 *3.25*
		F	12.5+265.9R *71.4+1,518.3R*	11.2+212.7R *64.0+1,214.5R*	10.4+177.3R *59.4+1,012.4R*	9.9+151.9R *56.5+867.4R*	9.5+132.9R *54.2+758.9R*	9.1+118.2R *52.0+674.9R*	8.9+106.4R *50.8+607.6R*
24	TEKS @ 24"	q	147 *2.15*	147 *2.15*	147 *2.15*	147 *2.15*	147 *2.15*	147 *2.15*	147 *2.15*
		F	13.9+178.9R *79.4+1,021.5R*	12.2+143.1R *69.7+817.1R*	11.0+119.2R *62.8+680.6R*	10.2+102.2R *58.2+583.6R*	9.6+89.4R *54.8+510.5R*	9.1+79.5R *52.0+454.0R*	8.8+71.5R *50.2+408.3R*
	TEKS @ 18"	q	197 *2.87*	196 *2.86*	196 *2.86*	196 *2.86*	196 *2.86*	196 *2.86*	196 *2.86*
		F	11.6+178.9R *66.2+1,021.5R*	10.3+143.1R *58.8+817.1R*	9.5+119.2R *54.2+680.6R*	8.9+102.2R *50.8+583.6R*	8.4+89.4R *48.0+510.5R*	8.1+79.5R *46.3+454.0R*	7.8+71.5R *44.5+408.3R*
	TEKS @ 12"	q	296 *4.32*	296 *4.32*	296 *4.32*	296 *4.32*	296 *4.32*	296 *4.32*	296 *4.32*
		F	9.4+178.9R *53.7+1,021.5R*	8.5+143.1R *48.5+817.1R*	8.0+119.2R *45.7+680.6R*	7.6+102.2R *43.4+583.6R*	7.2+89.4R *41.1+510.5R*	7.0+79.5R *40.0+454.0R*	6.8+71.5R *38.8+408.3R*
22	TEKS @ 24"	q	201 *2.93*	197 *2.88*	194 *2.83*	192 *2.80*	190 *2.77*	189 *2.76*	188 *2.74*
		F	10.6+130.1R *60.5+742.9R*	9.5+104.1R *54.2+594.4R*	8.7+86.7R *49.7+495.1R*	8.1+74.4R *46.3+424.8R*	7.7+65.1R *44.0+371.7R*	7.3+57.8R *41.7+330.0R*	7.0+52.0R *40.0+296.9R*
	TEKS @ 18"	q	263 *3.84*	258 *3.77*	255 *3.72*	253 *3.69*	252 *3.68*	251 *3.66*	250 *3.65*
		F	9.0+130.1R *51.4+742.9R*	8.2+104.1R *46.8+594.4R*	7.6+86.7R *43.4+495.1R*	7.1+74.4R *40.5+424.8R*	6.8+65.1R *38.8+371.7R*	6.5+57.8R *37.1+330.0R*	6.3+52.0R *36.0+296.9R*
	TEKS @ 12"	q	386 *5.63*	382 *5.57*	379 *5.53*	376 *5.49*	375 *5.47*	374 *5.46*	373 *5.44*
		F	7.4+130.1R *42.3+742.9R*	6.8+104.1R *38.8+594.4R*	6.4+86.7R *36.5+495.1R*	6.1+74.4R *34.8+424.8R*	5.9+65.1R *33.7+371.7R*	5.7+57.8R *32.5+330.0R*	5.5+52.0R *31.4+296.9R*
20	TEKS @ 24"	q	263 *3.84*	253 *3.69*	246 *3.59*	241 *3.52*	237 *3.46*	234 *3.42*	232 *3.39*
		F	8.5+100.1R *48.5+571.6R*	7.7+80.1R *44.0+457.4R*	7.1+66.7R *40.5+380.9R*	6.7+57.2R *38.3+326.6R*	6.4+50.1R *36.5+286.1R*	6.1+44.5R *34.8+254.1R*	5.9+40.0R *33.7+228.4R*
	TEKS @ 18"	q	336 *4.90*	326 *4.76*	319 *4.66*	314 *4.58*	310 *4.52*	308 *4.49*	305 *4.45*
		F	7.3+100.1R *41.7+571.6R*	6.7+80.1R *38.3+457.4R*	6.2+66.7R *35.4+380.9R*	5.9+57.2R *33.7+326.6R*	5.6+50.1R *32.0+286.1R*	5.4+44.5R *30.8+254.1R*	5.3+40.0R *30.3+228.4R*
	TEKS @ 12"	q	483 *7.05*	472 *6.89*	466 *6.80*	461 *6.73*	457 *6.67*	454 *6.63*	452 *6.60*
		F	6.1+100.1R *34.8+571.6R*	5.7+80.1R *32.5+457.4R*	5.3+66.7R *30.3+380.9R*	5.1+57.2R *29.1+326.6R*	4.9+50.1R *28.0+286.1R*	4.8+44.5R *27.4+254.1R*	4.6+40.0R *26.3+228.4R*

TEKS = #12-14 x ¾" TEKS 1 (or TRAXX 1) screws

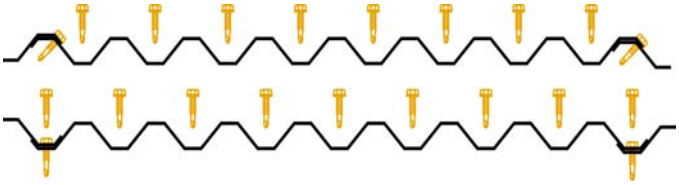

Deep VERCOR™

- 1 5/16" (*33 mm*) Deep Deck
- Inverted or Normal Position
- 36/8 (36/9) TEKS Screw Pattern at Supports
- Galvanized

Allowable Diaphragm Shear Values, q (plf, *kN/m*) and Flexibility Factors, F ((in./lb)x10^6, (*mm/N*)*x10*^{6})

GAGE	SIDELAP ATTACH-MENT		SPAN (ft-in., *mm*) 4'-0" *1,220*	5'-0" *1,520*	6'-0" *1,830*	7'-0" *2,130*	8'-0" *2,440*	9'-0" *2,740*	10'-0" *3,050*
26	TEKS @ 24"	q	118 *1.72*	117 *1.71*	116 *1.69*	115 *1.68*	115 *1.68*	115 *1.68*	114 *1.66*
		F	17.6+33.4R *100.5+190.7R*	15.6+26.7R *89.1+152.5R*	14.2+22.3R *81.1+127.3R*	13.2+19.1R *75.4+109.1R*	12.4+16.7R *70.8+95.4R*	11.9+14.9R *68.0+85.1R*	11.4+13.4R *65.1+76.5R*
	TEKS @ 18"	q	156 *2.28*	155 *2.26*	154 *2.25*	154 *2.25*	153 *2.23*	153 *2.23*	153 *2.23*
		F	14.9+33.4R *85.1+190.7R*	13.3+26.7R *75.9+152.5R*	12.3+22.3R *70.2+127.3R*	11.5+19.1R *65.7+109.1R*	10.9+16.7R *62.2+95.4R*	10.5+14.9R *60.0+85.1R*	10.1+13.4R *57.7+76.5R*
	TEKS @ 12"	q	233 *3.40*	231 *3.37*	231 *3.37*	230 *3.36*	230 *3.36*	229 *3.34*	229 *3.34*
		F	12.1+33.4R *69.1+190.7R*	11.0+26.7R *62.8+152.5R*	10.3+22.3R *58.8+127.3R*	9.8+19.1R *56.0+109.1R*	9.4+16.7R *53.7+95.4R*	9.1+14.9R *52.0+85.1R*	8.9+13.4R *50.8+76.5R*
24	TEKS @ 24"	q	176 *2.57*	169 *2.47*	165 *2.41*	162 *2.36*	160 *2.34*	158 *2.31*	157 *2.29*
		F	12.6+22.5R *71.9+128.5R*	11.4+18.0R *65.1+102.8R*	10.5+15.0R *60.0+85.7R*	9.9+12.8R *56.5+73.1R*	9.4+11.2R *53.7+64.0R*	9.0+10.0R *51.4+57.1R*	8.7+9.0R *49.7+51.4R*
	TEKS @ 18"	q	226 *3.30*	219 *3.20*	215 *3.14*	212 *3.09*	210 *3.06*	208 *3.04*	206 *3.01*
		F	10.9+22.5R *62.2+128.5R*	9.9+18.0R *56.5+102.8R*	9.2+15.0R *52.5+85.7R*	8.7+12.8R *49.7+73.1R*	8.3+11.2R *47.4+64.0R*	8.0+10.0R *45.7+57.1R*	7.8+9.0R *44.5+51.4R*
	TEKS @ 12"	q	325 *4.74*	319 *4.66*	314 *4.58*	311 *4.54*	309 *4.51*	307 *4.48*	306 *4.47*
		F	9.1+22.5R *52.0+128.5R*	8.3+18.0R *47.4+102.8R*	7.9+15.0R *45.1+85.7R*	7.5+12.8R *42.8+73.1R*	7.2+11.2R *41.1+64.0R*	7.0+10.0R *40.0+57.1R*	6.8+9.0R *38.8+51.4R*
22	TEKS @ 24"	q	245 *3.58*	231 *3.37*	221 *3.23*	215 *3.14*	210 *3.06*	206 *3.01*	203 *2.96*
		F	9.5+16.4R *54.2+93.6R*	8.8+13.1R *50.2+74.8R*	8.2+10.9R *46.8+62.2R*	7.8+9.3R *44.5+53.1R*	7.5+8.2R *42.8+46.8R*	7.2+7.3R *41.1+41.7R*	7.0+6.5R *40.0+37.1R*
	TEKS @ 18"	q	306 *4.47*	292 *4.26*	283 *4.13*	276 *4.03*	271 *3.95*	267 *3.90*	264 *3.85*
		F	8.4+16.4R *48.0+93.6R*	7.8+13.1R *44.5+74.8R*	7.3+10.9R *41.7+62.2R*	7.0+9.3R *40.0+53.1R*	6.7+8.2R *38.3+46.8R*	6.4+7.3R *36.5+41.7R*	6.3+6.5R *36.0+37.1R*
	TEKS @ 12"	q	429 *6.26*	415 *6.06*	406 *5.93*	399 *5.82*	394 *5.75*	390 *5.69*	387 *5.65*
		F	7.2+16.4R *41.1+93.6R*	6.7+13.1R *38.3+74.8R*	6.3+10.9R *36.0+62.2R*	6.0+9.3R *34.3+53.1R*	5.8+8.2R *33.1+46.8R*	5.7+7.3R *32.5+41.7R*	5.5+6.5R *31.4+37.1R*
20	TEKS @ 24"	q	323 *4.71*	299 *4.36*	283 *4.13*	272 *3.97*	263 *3.84*	257 *3.75*	252 *3.68*
		F	7.6+12.6R *43.4+71.9R*	7.1+10.1R *40.5+57.7R*	6.7+8.4R *38.3+48.0R*	6.4+7.2R *36.5+41.1R*	6.2+6.3R *35.4+36.0R*	6.0+5.6R *34.3+32.0R*	5.8+5.0R *33.1+28.6R*
	TEKS @ 18"	q	397 *5.79*	372 *5.43*	356 *5.20*	345 *5.03*	337 *4.92*	330 *4.82*	325 *4.74*
		F	6.8+12.6R *38.8+71.9R*	6.4+10.1R *36.5+57.7R*	6.0+8.4R *34.3+48.0R*	5.8+7.2R *33.1+41.1R*	5.6+6.3R *32.0+36.0R*	5.4+5.6R *30.8+32.0R*	5.3+5.0R *30.3+28.6R*
	TEKS @ 12"	q	543 *7.92*	519 *7.57*	503 *7.34*	492 *7.18*	483 *7.05*	477 *6.96*	472 *6.89*
		F	5.9+12.6R *33.7+71.9R*	5.5+10.1R *31.4+57.7R*	5.3+8.4R *30.3+48.0R*	5.0+7.2R *28.6+41.1R*	4.9+6.3R *28.0+36.0R*	4.8+5.6R *27.4+32.0R*	4.7+5.0R *26.8+28.6R*

TEKS = #12-14 x ¾" TEKS 1 (or TRAXX 1) screws

Deep VERCOR™

- 1 5/16" (*33 mm*) Deep Deck
- Insulating Concrete Fill
- Galvanized

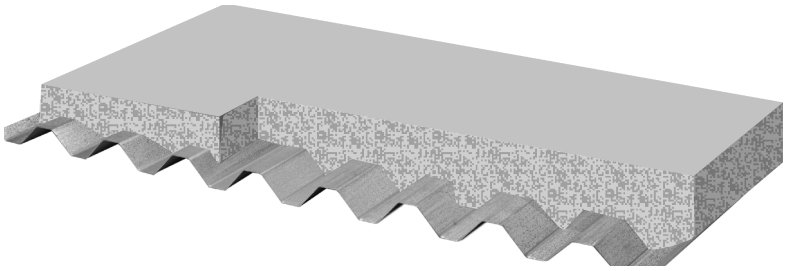

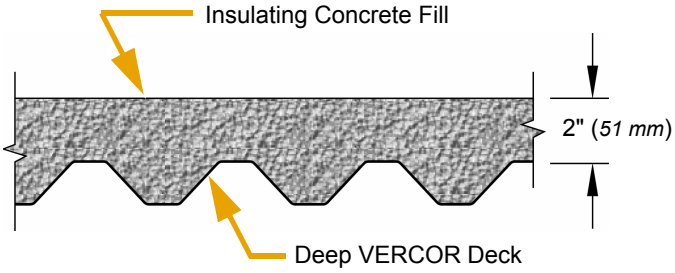

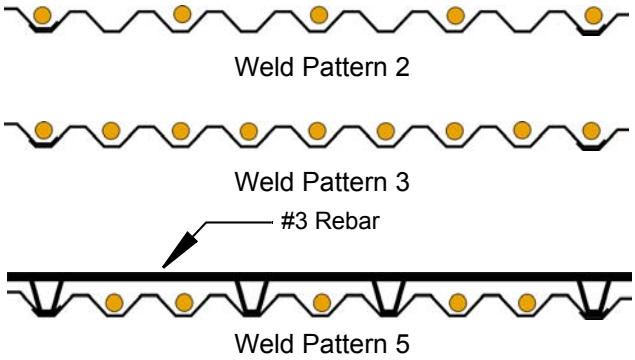

= Weld with 14 gage standard weld washer

= Weld with 16 gage anchor weld washer

(See page 70 for explanation of weld pattern.)

GAGE	WELD PATTERN		SPAN (ft.-in., *mm*) 4'-0" *1,220*	4'-6" *1,370*	5'-0" *1,520*	5'-6" *1,680*	6'-0" *1,830*	6'-3" *1,910*	6'-8" *2,030*	7'-0" *2,130*	7'-6" *2,290*	8'-0" *2,440*	8'-4" *2,540*	9'-0" *2,740*	10'-0" *3,050*
			WITH MESH												
26	2-2	q	497 *7.25*	480 *7.01*	467 *6.82*	456 *6.65*	446 *6.51*	442 *6.45*							
		F	1.75 *9.99*	1.82 *10.39*	1.88 *10.74*	1.93 *11.02*	1.97 *11.25*	1.99 *11.36*							
	3-2	q	578 *8.44*	555 *8.10*	537 *7.84*	522 *7.62*	510 *7.44*	504 *7.36*							
		F	1.69 *9.65*	1.76 *10.05*	1.82 *10.39*	1.88 *10.74*	1.93 *11.02*	1.95 *11.13*							
	5-2	q	691 *10.08*	661 *9.65*	636 *9.28*	616 *8.99*	600 *8.76*	592 *8.64*							
		F	1.69 *9.65*	1.76 *10.05*	1.82 *10.39*	1.88 *10.74*	1.93 *11.02*	1.95 *11.13*							
	5-3	q	1019 *14.87*	979 *14.29*	947 *13.82*	920 *13.43*	897 *13.09*	889 *12.97*							
		F	1.67 *9.54*	1.74 *9.94*	1.81 *10.34*	1.86 *10.62*	1.91 *10.91*	1.94 *11.08*							
24	2-2	q	552 *8.06*	552 *8.06*	552 *8.06*	530 *7.73*	512 *7.47*	505 *7.37*	493 *7.19*	485 *7.08*	473 *6.90*	463 *6.76*	458 *6.68*		
		F	1.45 *8.28*	1.45 *8.28*	1.45 *8.28*	1.51 *8.62*	1.57 *8.96*	1.60 *9.14*	1.64 *9.36*	1.67 *9.54*	1.71 *9.76*	1.75 *9.99*	1.77 *10.11*		
	3-2	q	653 *9.53*	653 *9.53*	653 *9.53*	625 *9.12*	601 *8.77*	591 *8.62*	575 *8.39*	564 *8.23*	550 *8.03*	536 *7.82*	528 *7.71*		
		F	1.40 *7.99*	1.40 *7.99*	1.40 *7.99*	1.46 *8.34*	1.52 *8.68*	1.54 *8.79*	1.59 *9.08*	1.62 *9.25*	1.66 *9.48*	1.70 *9.71*	1.73 *9.88*		
	5-2	q	804 *11.73*	804 *11.73*	804 *11.73*	765 *11.16*	733 *10.70*	720 *10.51*	698 *10.19*	683 *9.97*	663 *9.68*	645 *9.41*	635 *9.27*		
		F	1.40 *7.99*	1.40 *7.99*	1.40 *7.99*	1.46 *8.34*	1.52 *8.68*	1.54 *8.79*	1.59 *9.08*	1.62 *9.25*	1.66 *9.48*	1.70 *9.71*	1.73 *9.88*		
	5-3	q	1142 *16.67*	1142 *16.67*	1142 *16.67*	1093 *15.95*	1052 *15.35*	1035 *15.10*	1008 *14.71*	989 *14.43*	963 *14.05*	941 *13.73*	928 *13.54*		
		F	1.39 *7.94*	1.39 *7.94*	1.39 *7.94*	1.45 *8.28*	1.51 *8.62*	1.54 *8.79*	1.58 *9.02*	1.61 *9.19*	1.66 *9.48*	1.70 *9.71*	1.72 *9.82*		

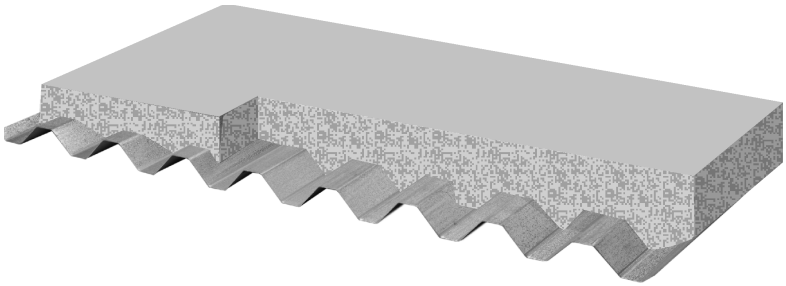

Deep VERCOR™

$1\frac{5}{16}$" (*33 mm*) Deep Deck
Insulating Concrete Fill
Galvanized

GAGE	WELD PATTERN		SPAN (ft.-in., *mm*) 4'-0" *1,220*	4'-6" *1,370*	5'-0" *1,520*	5'-6" *1,680*	6'-0" *1,830*	6'-3" *1,910*	6'-8" *2,030*	7'-0" *2,130*	7'-6" *2,290*	8'-0" *2,440*	8'-4" *2,540*	9'-0" *2,740*	10'-0" *3,050*
WITH MESH															
22	2-2	q	604 *8.81*	604 *8.81*	604 *8.81*	604 *8.81*	604 *8.81*	592 *8.64*	573 *8.36*	560 *8.17*	543 *7.92*	528 *7.71*	518 *7.56*	502 *7.33*	
		F	1.26 *7.19*	1.26 *7.19*	1.26 *7.19*	1.26 *7.19*	1.26 *7.19*	1.29 *7.37*	1.33 *7.59*	1.37 *7.82*	1.41 *8.05*	1.45 *8.28*	1.48 *8.45*	1.53 *8.74*	
	3-2	q	718 *10.48*	718 *10.48*	718 *10.48*	718 *10.48*	718 *10.48*	702 *10.24*	678 *9.89*	661 *9.65*	639 *9.33*	619 *9.03*	607 *8.86*	586 *8.55*	
		F	1.22 *6.97*	1.22 *6.97*	1.22 *6.97*	1.22 *6.97*	1.22 *6.97*	1.25 *7.14*	1.29 *7.37*	1.32 *7.54*	1.37 *7.82*	1.41 *8.05*	1.44 *8.22*	1.49 *8.51*	
	5-2	q	900 *13.13*	900 *13.13*	900 *13.13*	900 *13.13*	900 *13.13*	878 *12.81*	845 *12.33*	822 *12.00*	791 *11.54*	765 *11.16*	748 *10.92*	730 *10.65*	
		F	1.22 *6.97*	1.22 *6.97*	1.22 *6.97*	1.22 *6.97*	1.22 *6.97*	1.25 *7.14*	1.29 *7.37*	1.32 *7.54*	1.37 *7.82*	1.41 *8.05*	1.44 *8.22*	1.49 *8.51*	
	5-3	q	1241 *18.11*	1241 *18.11*	1241 *18.11*	1241 *18.11*	1241 *18.11*	1215 *17.73*	1175 *17.15*	1146 *16.72*	1108 *16.17*	1075 *15.69*	1055 *15.40*	1020 *14.89*	
		F	1.23 *7.02*	1.23 *7.02*	1.23 *7.02*	1.23 *7.02*	1.23 *7.02*	1.26 *7.19*	1.30 *7.42*	1.33 *7.59*	1.38 *7.88*	1.42 *8.11*	1.45 *8.28*	1.50 *8.57*	
20	2-2	q	642 *9.37*	642 *9.37*	642 *9.37*	642 *9.37*	642 *9.37*	642 *9.37*	642 *9.37*	642 *9.37*	619 *9.03*	598 *8.73*	586 *8.55*	563 *8.22*	536 *7.82*
		F	1.16 *6.62*	1.16 *6.62*	1.16 *6.62*	1.16 *6.62*	1.16 *6.62*	1.16 *6.62*	1.16 *6.62*	1.16 *6.62*	1.20 *6.85*	1.25 *7.14*	1.27 *7.25*	1.32 *7.54*	1.39 *7.94*
	3-2	q	763 *11.14*	763 *11.14*	763 *11.14*	763 *11.14*	763 *11.14*	763 *11.14*	763 *11.14*	763 *11.14*	733 *10.70*	707 *10.32*	691 *10.08*	663 *9.68*	628 *9.16*
		F	1.13 *6.45*	1.13 *6.45*	1.13 *6.45*	1.13 *6.45*	1.13 *6.45*	1.13 *6.45*	1.13 *6.45*	1.13 *6.45*	1.17 *6.68*	1.22 *6.97*	1.24 *7.08*	1.29 *7.37*	1.37 *7.82*
	5-2	q	965 *14.08*	965 *14.08*	965 *14.08*	965 *14.08*	965 *14.08*	965 *14.08*	965 *14.08*	965 *14.08*	924 *13.48*	888 *12.96*	867 *12.65*	828 *12.08*	780 *11.38*
		F	1.13 *6.45*	1.13 *6.45*	1.13 *6.45*	1.13 *6.45*	1.13 *6.45*	1.13 *6.45*	1.13 *6.45*	1.13 *6.45*	1.17 *6.68*	1.22 *6.97*	1.24 *7.08*	1.29 *7.37*	1.37 *7.82*
	5-3	q	1307 *19.07*	1307 *19.07*	1307 *19.07*	1307 *19.07*	1307 *19.07*	1307 *19.07*	1307 *19.07*	1307 *19.07*	1257 *18.34*	1214 *17.72*	1188 *17.34*	1141 *16.65*	1085 *15.83*
		F	1.15 *6.57*	1.15 *6.57*	1.15 *6.57*	1.15 *6.57*	1.15 *6.57*	1.15 *6.57*	1.15 *6.57*	1.15 *6.57*	1.19 *6.80*	1.24 *7.08*	1.26 *7.19*	1.32 *7.54*	1.39 *7.94*
WITHOUT MESH															
26	2-2	q	397 *5.79*	381 *5.56*	368 *5.37*	357 *5.21*	348 *5.08*	344 *5.02*							
		F	1.65 *9.42*	1.72 *9.82*	1.78 *10.16*	1.83 *10.45*	1.88 *10.74*	1.90 *10.85*							
	3-2	q	452 *6.60*	426 *6.22*	411 *6.00*	397 *5.79*	385 *5.62*	379 *5.53*							
		F	1.34 *7.65*	1.41 *8.05*	1.48 *8.45*	1.54 *8.79*	1.60 *9.14*	1.62 *9.25*							
	5-2	q	562 *8.20*	533 *7.78*	507 *7.40*	487 *7.11*	470 *6.86*	463 *6.76*							
		F	1.34 *7.65*	1.41 *8.05*	1.48 *8.45*	1.54 *8.79*	1.60 *9.14*	1.62 *9.25*							
	5-3	q	866 *12.64*	826 *12.05*	794 *11.59*	768 *11.21*	746 *10.89*	736 *10.74*							
		F	1.58 *9.02*	1.66 *9.48*	1.73 *9.88*	1.78 *10.16*	1.84 *10.51*	1.86 *10.62*							

See page 76 for weld patterns.

Deep VERCOR™

- $1\frac{5}{16}$" (*33 mm*) Deep Deck
- Insulating Concrete Fill
- Galvanized

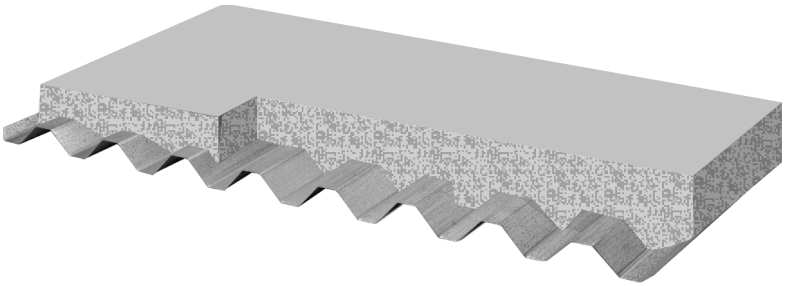

GAGE	WELD PATTERN		SPAN (ft.-in., *mm*) 4'-0" *1,220*	4'-6" *1,370*	5'-0" *1,520*	5'-6" *1,680*	6'-0" *1,830*	6'-3" *1,910*	6'-8" *2,030*	7'-0" *2,130*	7'-6" *2,290*	8'-0" *2,440*	8'-4" *2,540*	9'-0" *2,740*	10'-0" *3,050*
WITHOUT MESH															
24	2-2	q	492 *7.18*	492 *7.18*	492 *7.18*	471 *6.87*	453 *6.61*	446 *6.51*	434 *6.33*	426 *6.22*	415 *6.06*	405 *5.91*	400 *5.84*		
		F	1.39 *7.94*	1.39 *7.94*	1.39 *7.94*	1.45 *8.28*	1.51 *8.62*	1.54 *8.79*	1.58 *9.02*	1.61 *9.19*	1.65 *9.42*	1.69 *9.65*	1.72 *9.82*		
	3-2	q	569 *8.30*	569 *8.30*	569 *8.30*	541 *7.90*	518 *7.56*	508 *7.41*	492 *7.18*	481 *7.02*	467 *6.82*	454 *6.63*	447 *6.52*		
		F	1.09 *6.22*	1.09 *6.22*	1.09 *6.22*	1.15 *6.57*	1.21 *6.91*	1.24 *7.08*	1.28 *7.31*	1.31 *7.48*	1.36 *7.77*	1.40 *7.99*	1.42 *8.11*		
	5-2	q	719 *10.49*	719 *10.49*	719 *10.49*	680 *9.92*	649 *9.47*	635 *9.27*	613 *8.95*	598 *8.73*	578 *8.44*	560 *8.17*	550 *8.03*		
		F	1. 09 *6.22*	1.09 *6.22*	1.09 *6.22*	1.15 *6.57*	1.21 *6.91*	1.24 *7.08*	1.28 *7.31*	1.31 *7.48*	1.36 *7.77*	1.40 *7.99*	1.42 *8.11*		
	5-3	q	1063 *15.51*	1063 *15.51*	1063 *15.51*	1014 *14.80*	973 *14.20*	958 *13.98*	929 *13.56*	910 *13.28*	885 *12.92*	862 *12.58*	849 *12.39*		
		F	1.35 *7.71*	1.35 *7.71*	1.35 *7.71*	1.41 *8.05*	1.47 *8.39*	1.50 *8.57*	1.54 *8.79*	1.57 *8.96*	1.62 *9.25*	1.66 *9.48*	1.69 *9.65*		
22	2-2	q	573 *8.36*	573 *8.36*	573 *8.36*	573 *8.36*	573 *8.36*	560 *8.17*	542 *7.91*	529 *7.72*	511 *7.46*	497 *7.25*	487 *7.11*	471 *6.87*	
		F	1.24 *7.08*	1.24 *7.08*	1.24 *7.08*	1.24 *7.08*	1.24 *7.08*	1.26 *7.19*	1.31 *7.48*	1.34 *7.65*	1.38 *7.88*	1.43 *8.17*	1.45 *8.28*	1.50 *8.57*	
	3-2	q	662 *9.66*	662 *9.66*	662 *9.66*	662 *9.66*	662 *9.66*	647 *9.44*	623 *9.09*	606 *8.84*	584 *8.52*	564 *8.23*	552 *8.06*	532 *7.76*	
		F	0.96 *5.48*	0.96 *5.48*	0.96 *5.48*	0.96 *5.48*	0.96 *5.48*	0.98 *5.60*	1.02 *5.82*	1.05 *6.00*	1.10 *6.28*	1.14 *6.51*	1.16 *6.62*	1.22 *6.97*	
	5-2	q	845 *12.33*	845 *12.33*	845 *12.33*	845 *12.33*	845 *12.33*	823 *12.01*	790 *11.53*	768 *11.21*	737 *10.76*	710 *10.36*	694 *10.13*	665 *9.70*	
		F	0.96 *5.48*	0.96 *5.48*	0.96 *5.48*	0.96 *5.48*	0.96 *5.48*	0.98 *5.60*	1.02 *5.82*	1.05 *6.00*	1.10 *6.28*	1.14 *6.51*	1.16 *6.62*	1.22 *6.97*	
	5-3	q	1208 *17.63*	1208 *17.63*	1208 *17.63*	1208 *17.63*	1208 *17.63*	1181 *17.24*	1141 *16.65*	1112 *16.23*	1075 *15.69*	1041 *15.19*	1022 *14.91*	986 *14.39*	
		F	1.22 *6.97*	1.22 *6.97*	1.22 *6.97*	1.22 *6.97*	1.22 *6.97*	1.24 *7.08*	1.29 *7.37*	1.32 *7.54*	1.37 *7.82*	1.41 *8.05*	1.44 *8.22*	1.49 *8.51*	
20	2-2	q	628 *9.16*	628 *9.16*	628 *9.16*	628 *9.16*	628 *9.16*	628 *9.16*	628 *9.16*	628 *9.16*	604 *8.81*	584 *8.52*	571 *8.33*	549 *8.01*	522 *7.62*
		F	1.15 *6.57*	1.15 *6.57*	1.15 *6.57*	1.15 *6.57*	1.15 *6.57*	1.15 *6.57*	1.15 *6.57*	1.15 *6.57*	1.20 *6.85*	1.24 *7.08*	1.26 *7.19*	1.32 *7.54*	1.38 *7.88*
	3-2	q	724 *10.57*	724 *10.57*	724 *10.57*	724 *10.57*	724 *10.57*	724 *10.57*	724 *10.57*	724 *10.57*	694 *10.13*	668 *9.75*	652 *9.52*	624 *9.11*	589 *8.60*
		F	0.89 *5.08*	0.89 *5.08*	0.89 *5.08*	0.89 *5.08*	0.89 *5.08*	0.89 *5.08*	0.89 *5.08*	0.89 *5.08*	0.93 *5.31*	0.97 *5.54*	0.99 *5.65*	1.04 *5.94*	1.11 *6.34*
	5-2	q	926 *13.51*	926 *13.51*	926 *13.51*	926 *13.51*	926 *13.51*	926 *13.51*	926 *13.51*	926 *13.51*	885 *12.92*	849 *12.39*	826 *12.05*	789 *11.51*	742 *10.83*
		F	0.89 *5.08*	0.89 *5.08*	0.89 *5.08*	0.89 *5.08*	0.89 *5.08*	0.89 *5.08*	0.89 *5.08*	0.89 *5.08*	0.93 *5.31*	0.97 *5.54*	0.99 *5.65*	1.04 *5.94*	1.11 *6.34*
	5-3	q	1297 *18.93*	1297 *18.93*	1297 *18.93*	1297 *18.93*	1297 *18.93*	1297 *18.93*	1297 *18.93*	1297 *18.93*	1247 *18.20*	1203 *17.56*	1177 *17.18*	1130 *16.49*	1072 *15.64*
		F	1.15 *6.57*	1.15 *6.57*	1.15 *6.57*	1.15 *6.57*	1.15 *6.57*	1.15 *6.57*	1.15 *6.57*	1.15 *6.57*	1.20 *6.85*	1.24 *7.08*	1.27 *7.25*	1.32 *7.54*	1.39 *7.94*

See page 76 for weld patterns.

CELLULAR ROOF DECK DESIGN INFORMATION

Properties

Section properties have been computed in accordance with the "Specification for the Design of Cold-Formed Steel Structural Members" published by AISI.

Material

Cellular roof deck sections are fabricated from galvanized steel conforming to ASTM A653 SS Grade 33, with a minimum yield strength of 38,000 psi *(262,000 kPa)*. The fluted top and flat bottom sections are factory resistance-welded together, creating a strong structural section.

Note: Weld marks will be visible on the flat bottom.

Definitions

The **gage** "xx/yy" of cellular decks is defined as:

- First number (xx) is the gage of the fluted top section.
- Second number (yy) is the gage of the flat bottom section.

$\mathbf{I_d}$ is the effective moment of inertia for deflection of simple or multiple span conditions.

S (+ or -) is the effective section modulus.

M (+ or -) is the ASD allowable moment where $M = M_n / \Omega_b$, with $\Omega_b = 1.67$.

Vertical Shear (V) is the ASD allowable vertical shear strength based on the horizontal shear strength of the resistance welds connecting the top and bottom sections, where $V = V_n / \Omega$, with $\Omega = 2.5$.

"END" shear strength values are applicable adjacent to supports where deck is not continuous.

"INTERIOR" shear strength values are applicable adjacent to supports where deck is continuous.

Cellular Roof Deck Bearing

Compare actual end and interior reactions to allowable reactions for fluted deck of the same gage as the fluted top section of the cellular deck.

Vertical Loads and Diaphragm Shears

Vertical loads can be determined from the properties on page 81. Diaphragm shear strengths and flexibility factors shown in HSB and N roof deck tables would apply to cellular roof deck sections with a fluted top section of the same profile but with the gage of the flat bottom sheet. This applies with or without acoustical perforations in the flat bottom section of the cellular deck.

Vent Tabs

Factory vent tabs are not available in cellular roof deck.

Acoustical Cellular Roof Deck

Cellular HSB-CD and N-24CD roof decks are available with acoustical perforations in the flat bottom plate. Acoustical deck can provide sound attenuation in buildings where deck is exposed to the interior. Acoustical perforations are 5⁄32 inch (*4 mm*) in diameter on 7⁄16 inch (*6 mm*) staggered centers in bands centered under the top flanges of the fluted top sections. Insulation is factory installed. Sound absorption information is shown in Table 10. Noise Reduction Coefficient (NRC) values were determined by tests in accordance with ANSI/ASTM C423 conducted by Riverbank Acoustical Laboratories. Test reports furnished upon request.

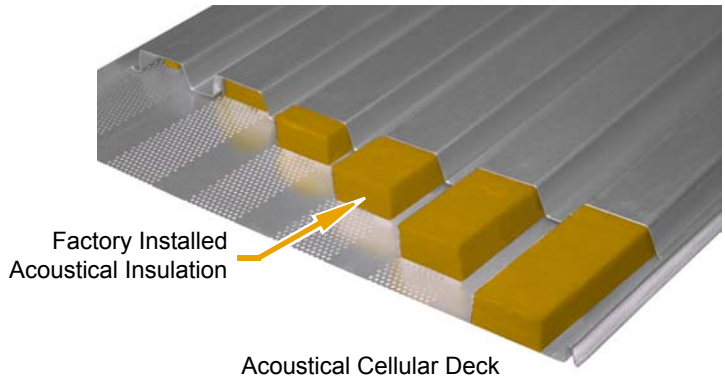

FIGURE 17

Table 10: Noise Reduction Coefficients of Acoustical Cellular Deck

Profile	Absorption Coefficients						Noise Reduction Coefficient
	125	250	500	1000	2000	4000	
HSB-CD	0.60	0.55	0.80	1.01	0.89	0.66	0.80
N–24CD	0.84	0.79	1.16	0.89	0.82	0.60	0.95

Note: All values are per ft (*m*) of width.

GAGE	WEIGHT	I_d FOR DEFLECTIONS Simple Span	Multiple Span	POSITIVE MOMENT +S	+M	NEGATIVE MOMENT –S	–M	VERTICAL SHEAR End	Interior
	psf *N/m²*	in.⁴ *mm⁴*	in.⁴ *mm⁴*	in.³ *mm³*	in.-kips *kNm*	in.³ *mm³*	in.-kips *kNm*	lb *N*	lb *N*
HSB®-CD									
20/20	3.6 *172.4*	0.392 *535,310*	0.392 *535,310*	0.284 *15,269*	6.5 *2.4*	0.393 *21,129*	8.9 *3.3*	355 *5,181*	538 *7,852*
20/18	4.1 *196.3*	0.428 *584,472*	0.430 *587,203*	0.292 *15,699*	6.6 *2.4*	0.413 *22,204*	9.4 *3.5*	333 *4,860*	410 *5,983*
20/16	4.5 *215.5*	0.458 *625,439*	0.477 *651,385*	0.298 *16,021*	6.8 *2.5*	0.431 *23,172*	9.8 *3.6*	320 *4,670*	352 *5,137*
18/20	4.1 *196.3*	0.510 *696,450*	0.510 *696,450*	0.430 *23,118*	9.8 *3.6*	0.472 *25,376*	10.7 *4.0*	389 *5,677*	637 *9,296*
18/18	4.6 *220.2*	0.559 *763,364*	0.559 *763,364*	0.441 *23,709*	10.0 *3.7*	0.539 *28,978*	12.3 *4.6*	459 *6,699*	609 *8,888*
18/16	5.1 *244.2*	0.600 *819,353*	0.600 *819,353*	0.450 *24,193*	10.3 *3.8*	0.562 *30,215*	12.8 *4.7*	436 *6,363*	504 *7,355*
16/18	5.3 *253.8*	0.677 *924,503*	0.677 *924,503*	0.610 *32,795*	13.9 *5.2*	0.665 *35,752*	15.1 *5.6*	493 *7,195*	697 *10,172*
16/16	5.8 *277.7*	0.729 *995,514*	0.729 *995,514*	0.622 *33,441*	14.2 *5.3*	0.693 *37,258*	15.8 *5.9*	657 *9,588*	794 *11,588*
N-24CD									
20/20	4.1 *196.3*	1.694 *2,313,306*	1.694 *2,313,306*	0.565 *30,376*	12.9 *4.8*	0.801 *43,064*	18.2 *6.7*	606 *8,844*	959 *13,996*
20/18	5.6 *268.1*	1.855 *2,533,166*	1.912 *2,611,004*	0.562 *30,215*	12.8 *4.7*	0.985 *52,957*	22.4 *8.3*	564 *8,231*	757 *11,048*
20/16	5.1 *244.2*	1.967 *2,686,112*	2.159 *2,948,304*	0.597 *32,097*	13.6 *5.0*	1.027 *55,215*	23.4 *8.7*	540 *7,881*	642 *9,369*
18/20	4.8 *229.8*	2.209 *3,016,584*	2.209 *3,016,584*	0.847 *45,537*	19.3 *7.2*	0.969 *52,096*	22.1 *8.2*	664 *9,690*	1,155 *16,856*
18/18	5.3 *253.8*	2.421 *3,306,089*	2.421 *3,306,089*	0.868 *46,666*	19.8 *7.3*	1.183 *63,602*	26.9 *10.0*	780 *11,383*	1,130 *16,491*
18/16	5.8 *277.7*	2.599 *3,549,163*	2.626 *3,586,034*	0.885 *47,580*	20.1 *7.5*	1.335 *71,774*	30.4 *11.3*	738 *10,770*	938 *13,689*
16/18	6.1 *292.1*	2.965 *4,048,968*	2.965 *4,048,968*	1.194 *64,193*	27.2 *10.1*	1.345 *72,311*	30.6 *11.3*	838 *12,230*	1,279 *18,666*
16/16	6.6 *316.0*	3.193 *4,360,322*	3.193 *4,360,322*	1.218 *65,483*	27.6 *10.2*	1.606 *86,343*	36.5 *13.5*	1,111 *16,214*	1,492 *21,774*

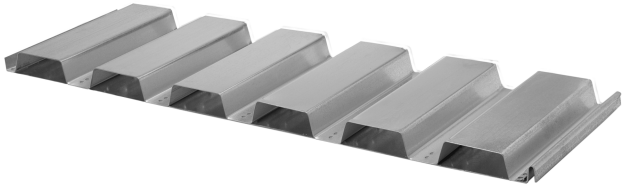

Refer to page 79 for cellular roof deck design information.

Index

Accessories 19
Acoustical deck 14
Attachment
  Fasteners (pins) 7
  Parallel collectors 11
  PLB™/HSB® 26
  PLN™/N 28
  Sidelaps. 10
  Supports 7
  VERCOR™ 68
  Welds 7
Bearing. 4
Cantilevered deck 5
Cellular deck 79–81
Closures 19
Concentrated loads 5
Construction loads 5
Design example 14
Design formulas 5
Diaphragm shear 6
Diaphragms
  Composite deck. 7
  Roof deck 6
Dimensions
  PLB™/HSB® 26
  PLN™/N 28
  VERCOR™ 72
Factory Mutual 6
Finishes 12
Fire resistance ratings 13, 18
Flexibility factor 6
Galvanized deck. 12
Galvanized with primer. 12
Hilti pins 8, 12
  Tables (q and F) 36–41
How to use tables. 25
Load Tables
  Diaphragm. 6
  PLB™/HSB® 27
  PLN™/N 29
  Uniform 4
  VERCOR™ 73
Loads
  Concentrated. 5
  Suspended 5
  Vertical. 4
Metric conversions 24
N tables (q and F) 64–67
Noise reduction coefficients 14
Painted deck 12
Parallel collector attachment 11
PLB™ tables (q and F). 30–47
PLN™ tables (q and F) 64–67
Pneutek pins 7, 12
  Tables (q and F) 30–35
Profiles
  Designations 4
  Summary. 2
Properties
  PLB™/HSB® 26
  PLN™/N 28
  Summary. 2
PunchLok® system. 10
Roofing. 13
Screws 11
ShearTranz® system 9
  Details 58
  Installation instructions 59
  System 80 63
  Tables (q and F) 54–57, 60–62, 67
Sidelap connections. 10–12
Spans 13
Specification. 20
Stress 4
Sump pan. 19
System 80 63
Tension strength. 6
Venting 13
Venting, VERCOR™ 70
VERCOR™
  Attachment 68
  Diaphragms. 68
  Insulating fill. 69
  Venting 70
  Tables (q and F) 74–78
Weights
  PLB™/HSB® 26
  PLN™/N 28
Weld washers. 7
Welding 7
Welds
  Arc spot welds. 11
  Fillet welds. 11
  HSB® (q and F) 48–53
  PLB™ (q and F) 42–47
  ShearTranz® system 54–57
  Top seam. 11
Wind uplift 6, 69, 70

The PunchLok® tool is covered by U.S. Patent No. 6, 212,932. Formation of the PunchLok® Deck system using the PunchLok® tool is covered by U.S. Patent No. 6,397,469. Other patents pending relative to the PunchLok® system. The ShearTranz® II and ShearTranz® II-42 roof deck systems are covered by United States Patent No. 4,894,967.

PunchLok®, ShearTranz®, and HSB® are registered trademarks of Verco Manufacturing Co. of Phoenix, Arizona.
Verco™, PLB™, PLN™, PLW2™, PLW3™, FormLok™, and Vercor™ are trademarks of Verco Manufacturing Co. of Phoenix, Arizona.

VERCO MANUFACTURING COMPANY reserves the right to change the design or details of its products without notice. The information presented herein is for general information only and is not to be used or relied upon for any application without complete review of the proposed application and without a complete review by a licensed professional architect, engineer, designer or other qualified professional.

To the best of our information, the information contained herein is accurate. However, VERCO MANUFACTURING COMPANY assumes no liability whatsoever for the accuracy or completeness of the information contained herein.

VERCO MANUFACTURING COMPANY makes no representation or warranty of any kind, either express or implied, respecting any information contained in this catalog including, but not limited to, the accuracy, completeness or suitability of such information for any particular purpose or use.

VERCO MANUFACTURING COMPANY EXPRESSLY DISCLAIMS ANY AND ALL WARRANTIES, EXPRESS OR IMPLIED, INCLUDING THE WARRANTIES OF MERCHANTABILITY AND FITNESS FOR A PARTICULAR PURPOSE.

In addition, VERCO MANUFACTURING COMPANY EXPRESSLY DISCLAIMS ANY LIABILITY FOR SPECIAL OR CONSEQUENTIAL DAMAGES INCLUDING, BUT NOT LIMITED TO, LOSS OF PROFITS OR LOSS OF USE. Any liability arising from the use of its products is limited to the purchase price of the product.

As used herein, references to VERCO MANUFACTURING COMPANY includes any affiliates and subsidiaries.

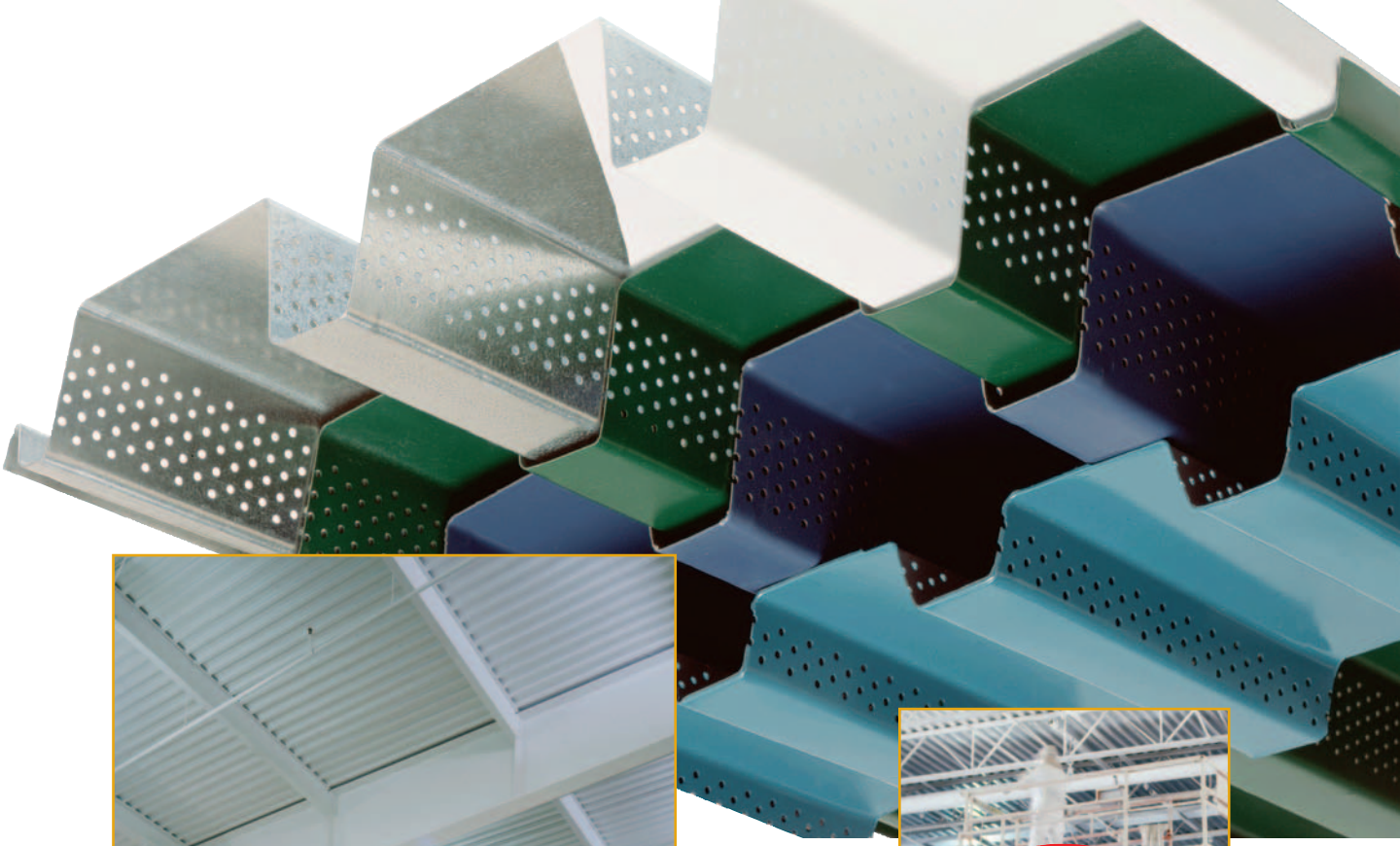

Verco can supply factory applied primer paint in standard gray, white, double white, or custom colors over galvanized or cold rolled steel to meet project requirements.

Depending on the circumstances, use of Verco factory primer painted deck can:

- eliminate field painting
- eliminate touch-up painting
- provide an excellent base for field finish paint if factory primer is not left exposed

Use of the PunchLok® system complements the benefits of the factory primer painted deck and increases the cost savings.

By offering a variety of both attachment and finish options, Verco provides the flexibility to combine finish and attachment options to minimize construction time and maximize project cost savings.